CYCLOIDAL (ORBIT) GEAR HYDRAULIC MOTORS

www.grhpower.com

GRH POWER

液压摆线马达

国瑞液压

COMPANY INTRODUCTION 公司简介

GRH is specialized in providing hydraulic components and solutions for hydraulic systems. With continuous improvement and enthusiasm over the past 30 years, GRH has developed into an emerging power in fluid power industry since it was established in 1986.

Research and development are the driving force that facilitates GRH's ability to create new products. Standards of TS16949 and ISO14000 are our guiding principles. Employees' capabilities and creativity are major factors that differentiate GRH from our competitors.

GRH designs and produces Hydraulic Gear Pumps & Motors, Monoblock Valves, Sectional Stack Valves, Proportional Valves and Flow Dividers.These products are used on industrial machinery, construction equipment,agricultural equipment and material handling applications.GRH is also willing to work with our customers to develop specialized products for their special needs.Our customers can count on GRH's extensive system design and application experience when they are designing their hydraulic systems. GRH has designed and developed a series of load sensing proportional stackable valves which provides an improvement in valve operating performance and system efficiency.

持续的改进和对液压领域的专注，超过三十年的设计及制造经验，GRH从1986年至今取得了引人注目的成就。

产品的研发和技术创新是GRH前进的动力。TS16949和 ISO14000的标准是GRH遵守的程序化准则。员工的能力和创造性是GRH不同于竞争对手的主要因素。

GRH设计并生产：液压齿轮泵/片式多路阀/整体多路阀/比例多路阀（带负载敏感及压力补偿）/液压马达/液压分流马达；这些零部件主要应用于工业机械、物料搬运、工程机械、农业和工业领域。GRH充分意识到客户在设计阶段作出的贡献及其产品设计输入的重要性。除了供应GRH目录上的产品，GRH还与客户密切协作提供液压技术的系统解决方案。客户可以依靠GRH在液压元件及系统设计方面的经验及GRH技术专家去实现他们的设想。GRH已关注到电子控制与液压系统集成的重要性，为了优化设计及节约能源，GRH在系统的电子控制及集成化方面正在做出自己的努力。

CONTENTS 目录

GRH Cycloidal Gear Hydraulic Motor Series - GRH摆线马达系列

Introduction of GRH's Cycloidal Gear Hydraulic Motor - GRH摆线马达简介	1
GR Series General - GR系列概述	2
GR Series Dimensions and Mounting Data - GR系列尺寸和安装参数	3-4
GR Series Function Diagrams - GR系列性能图	5-9
GR Series Dimensions and Mounting Data - GR系列尺寸和安装参数	10-11
GR Series Shaft Extensions - GR系列轴伸参数	12-14
GR Series Order Information - GR系列订购选型代码	15

GRH Cycloidal Hydraulic Motor Series - GRH摆线马达系列

Introduction of GRH's Cycloidal Hydraulic Motor - GRH摆线马达简介	16
GS Series General - GS系列概述	17
GS Series Dimensions and Mounting Data - GS系列尺寸和安装参数	18-19
GS Series Function Diagrams - GS系列性能图	20-25
GS Series Dimensions and Mounting Data - GS系列尺寸和安装参数	26-30
GS Series Shaft Extensions - GS系列轴伸参数	31-34
GS Series Order Information - GS系列订购选型代码	35

Introduction of GRH's Cycloidal Gear Hydraulic Motor GRH摆线马达简介

GENERAL INFORMATION

Cycloidal gear motors convert hydraulic energy (pressure, oil flow) into mechanical energy (torque, speed). Cycloidal gear motors operate on the principle of an internal gear (rotor) rotating within a fixed external gear (stator). The internal gear transmits the torque generated by the application of pressure from hydraulic oil fed into moto which is then delivered via the motor's output shaft. Cycloidal gear motors have high starting torque and constant output torque at wide speed range.

DISTIBUTORVALVE

GR, GRS series motors have spool valve: the distributor valve has been integrated with the output shaft. The cardan shaft rotates distributor valve and transfers mechanical energy from gerotor set to output shaft. The valve has hydrodynamic bearings and has infinite life when load ratings are not exceeded.

GEAR WHEEL SET

There are two forms of gearwheel set:

Roll-gerotor set has teeth fitted with rollers. The rollers reduce local stress and the tangential reaction forces on the rotor reducing friction to a minimum. This gives long operating life and better efficiency even at continuous high pressures.

Roll-gerotor sets are recommended for operation with thin oil and for applications with continually reversing applications with continually reversing loads. GR, GRS series motors have roll-gerotor set.

简介

摆线马达将液压能（压力，流量）转化成机械能（扭矩，转速）。基本原理是一个内齿轮（转子）围绕一个固定的外齿轮（定子）旋转。内齿轮将进油口压力产生的扭矩，通过输出轴传输出去。

分配阀

GR,GRS系列马达带有滑阀：分配阀和输出轴一体化设计。万向轴带动分配阀把机械能从齿轮传到输出轴。阀带有液体润滑轴承，在不超过最大负载的情况下可以拥有无限的寿命。

齿轮组

有2种形式的齿轮组：

滚柱齿轮有齿与滚柱啮合。滚柱可以降低作用于转子上的压力和间接的反作用力，把摩擦降到最低。这样的设计即使在连续高压的情况下，也可以保证产品的寿命增加和效率提高。滚柱齿轮副适用于稀油的使用条件和连续正反压力转换的应用场合。GR，GRS系列都有滚柱齿轮副。

General 概述

APPLICATION 应用

» Conveyors 输送机械
» Feeding mechanism of robots and manipulators 机器人和操纵器的给料机械
» Metal working machines 金属加工机械
» Textile machines 纺织机
» Agricultural machines 农用机械
» Food industries 食品工业
» Grass cutting machinery etc. 割草机

OPTIONS 可选功能

» Model-Spool valve, roll-gerotor 带滑阀，滚动转子
» Flange mount 法兰连接
» Motor with needle bearing 马达带滚针轴承
» Side and rear ports 侧边和底部油口
» Shafts: straight, splined and tapered 轴伸：平键、花键、锥键
» Shaft seal for high and low pressure 轴油封可适用于高压和抵压
» Metric and BSPP ports 公制和BSPP油口
» Speed sensoring 速度感应
» Other special features 其他特点

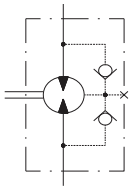

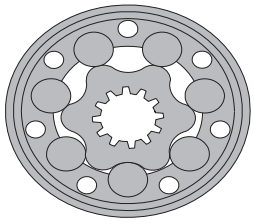

GENERAL 一般参数

Max.Displacement 最大排量	cm^3/rev	397
Max.Speed 最高转速	RPM	970
Max.Torque 最大扭矩	Nm	cont.:610 int.:690
Max.Output 最大输出功率	KW	15
Max.Pressure Drop 最大压力降	Mpa	cont.:17.5 int.:20
Max.Oil Flow 最大流量	lpm	75
Min.Speed 最低转速	RPM	10
Pressure Fluid 压力油液		Mineral based-HLP(DIN 51524) or HM(ISO 6743/4)
Temperature Range 温度范围	℃	-40 to 140
Optimal Viscosity Range 粘度范围	mm^2/s	20 to 75
Filtration 过滤		ISO code 20/16 (Min.) (recommended fluid filtration of 25 microns) ISO 20/16（推荐液体过滤精度25μm）

Oil Flow in Drain Line 泄油口流量

Pressure Drop 压力降 Mpa	Viscosity 粘度 mm^2/s	Oil Flow in Drain Line 泄油口流量 lpm
10	20	2,5
	35	1,8
14	20	3,5
	35	2,8

Pressure Losses 压力损失

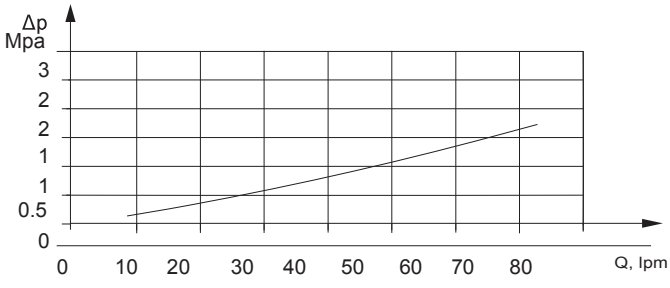

Dimensions and Mounting Data 尺寸和连接参数

Specification data for GR series motors with A、C、E、T、R、K、H、S、P、J、I shafts.(ϕ 28, 56 sealing diameter)
GR技术参数,轴型号A、C、E、T、R、K、H、S、P、J、I (ϕ 28, 56密封直径)

Type 品名		GR 50	GR 80	GR 100	GR 125	GR 160	GR 200	GR 250	GR 315	GR 400
Displacement 排量 (cm^3/rev)		51,5	80,3	99,8	125,7	159,6	199,8	250,1	315,7	397
Max Speed 最高转速 (RPM)	Cont.	775	750	600	475	375	300	240	190	150
	Int.*	970	940	750	600	470	375	300	240	190
Max Torque 最大扭矩 (Nm)	Cont.	100	200	240	300	390	385	390	360	380
	Int.*	130	220	280	340	430	460	470	470	470
	Peak**	170	270	320	370	460	560	600	610	610
Max Output 最大功率 (KW)	Cont.	7	12,5	13	12,5	11,5	9	8	5	4,8
	Int.*	8,5	15	15	14,5	14	12	9,5	8	6,8
Max Pressure Drop 最大压力降 (Mpa)	Cont.	14	17,5	17,5	17,5	17,5	14	11	8,5	6,5
	Int.*	17,5	20	20	20	20	17,5	14	11,5	9
	Peak**	22,5	22,5	22,5	22,5	22,5	22,5	20	15	11,5
Max Oil Flow 最大流量 (lpm)	Cont.	40	60	60	60	60	60	60	60	60
	Int.*	50	75	75	75	75	75	75	75	75
Max Inlet Pressure 最大进油压力 (Mpa)	Cont.	17,5	17,5	17,5	17,5	17,5	17,5	17,5	17,5	17,5
	Int.*	20	20	20	20	20	20	20	20	20
	Peak**	22,5	22,5	22,5	22,5	22,5	22,5	22,5	22,5	22,5
Max. Return Pressure with Drain Line 最大泄油口回油压力 (Mpa)	Cont.	17,5	17,5	17,5	17,5	17,5	17,5	17,5	17,5	17,5
	Int.*	20	20	20	20	20	20	20	20	20
	Peak**	22,5	22,5	22,5	22,5	22,5	22,5	22,5	22,5	22,5
Max. Starting Pressure with Unloaded Shaft 最大开启压力无径向荷载 (Mpa)		1	1	1	0,9	0,7	0,5	0,4	0,3	0,3
Min Starting Torque 最小开启扭矩 (Nm)	At max.press. drop Cont.	80	150	200	250	320	330	310	315	315
	At max.press. drop Int.*	100	170	230	280	370	400	480	580	500
Min. Speed 最低转速 (RPM)		10	10	10	10	10	10	10	10	10
Weight 重量 (kg)	MR(F)	6,8	6,9	7,2	7,3	7,5	8	8,4	9,1	9,8
For rear ports : +0,650	MRQ(N)	6,2	6,3	6,6	6,8	7,6	7,2	7,8	8,6	9,3

* Intermittent operation: the permissible values may occur for max. 10% of every minute. 间断工况：在间断工况下工作时间每分钟要少于6秒。

** Peak load: the permissible values may occur for max. 1% of every minute. 峰值压力：在峰值压力下，工作时间要少于每分钟0.6秒。

*** If speed lower than given, consult factory or your regional manager. 如果转速低于额定，请联络工厂或您的区域经理。

1. Intermittent speed and intermittent pressure must not occur simultaneously. 严禁马达同时工作在间断工作转速和间断工作压力下。
2. Recommended filtration is per ISO cleanliness code 20/16. A nominal filtration of 25 micron or better. 推荐使用ISO清洁标准20/16的过滤标准。常规过滤精度25μm或更加。
3. Recommend using a premium quality, anti-wear type mineral based hydraulic oil HLP(DIN51524) or HM (ISO 6743/4). 推荐使用高品质抗磨液压油HLP (DIN51524) 或 HM (ISO 6743/4)。
   If using synthetic fluids consult the factory for alternative seal materials. 如果使用合成油，请咨询工厂选配相应的密封材料。
4. Recommended minimum oil viscosity 13 mm^2/s at 50°C . 推荐最低粘度13 mm^2/s at 50°C。
5. Recommended maximum system operating temperature is 82°C . 推荐最高操作温度82℃。
6. To assure optimum motor life fill with fluid prior to loading and run at moderate load and speed for 10-15 minutes. 为了延长马达寿命，请先注入油液在中等负载和速度下运转10-15分钟。

Dimensions and Mounting Data 尺寸和安装参数

Specification data for GR series motors with B、F、G shafts.(ϕ 35 sealing diameter)
GR技术参数， 轴型号B、F、G（ϕ35密封直径）

Type 品名		GR 50	GR 80	GR 100	GR 125	GR 160	GR 200	GR 250	GR 315	GR 400
Displacement 排量 (cm³/rev)		51,5	80,3	99,8	125,7	159,6	199,8	250,1	315,7	397
Max. Speed 最高转速 (RPM)	Cont.	775	750	600	475	375	300	240	190	150
	Int.*	970	940	750	600	470	375	300	240	190
Max. Torque 最大扭矩 (Nm)	Cont.	10	20	24	30	39	45	54	55	61
	Int.*	130	220	280	340	430	500	610	690	690
	Peak**	170	270	320	370	460	560	710	840	870
Max. Output 最大功率 (KW)	Cont.	7	12,5	13	12,5	11,5	11	10	9	7,8
	Int.*	8,5	15	15	14,5	14	13	12	10	10,6
Max. Pressure Drop 最大压力降(Mpa)	Cont.	14	17,5	17,5	17,5	17,5	17,5	17,5	13,5	11
	Int.*	17,5	20	20	20	20	20	20	17,5	14
	Peak**	22,5	22,5	22,5	22,5	22,5	22,5	22,5	21	17,5
Max. Oil Flow 最大流量 (lpm)	Cont.	40	60	60	60	60	60	60	60	60
	Int.*	50	75	75	75	75	75	75	75	75
Max. Inlet Pressure 最大进油压力 (Mpa)	Cont.	17,5	17,5	17,5	17,5	17,5	17,5	17,5	17,5	17,5
	Int.*	20	20	20	20	20	20	20	20	20
	Peak**	22,5	22,5	22,5	22,5	22,5	22,5	22,5	22,5	22,5
Max. Return Pressure with Drain Line 最大泄油口回油压力 (Mpa)	Cont.	17,5	17,5	17,5	17,5	17,5	17,5	17,5	17,5	17,5
	Int.*	20	20	20	20	20	20	20	20	20
	Peak**	22,5	22,5	22,5	22,5	22,5	22,5	22,5	22,5	22,5
Max. Starting Pressure with Unloaded Shaft 最大开启压力无径向荷载 (Mpa)		10	10	10	9	7	5	4	3	3
Min. Starting Torque 最小开启扭矩 (Nm)	At max.press. drop Cont.	80	150	200	250	320	410	500	500	500
	At max.press. drop Int.*	100	170	230	280	370	460	550	660	610
Min. Speed 最低转速 (RPM)		10	10	10	10	10	10	10	10	10
Weight 重量 (kg) For rear ports : +0,650		6,9	7	7,3	7,4	7,6	8,1	8,5	9,2	9,9

* Intermittent operation: the permissible values may occur for max. 10% of every minute. 间断工况：在间断工况下工作时间每分钟要少于6秒。

** Peak load: the permissible values may occur for max. 1% of every minute. 峰值压力：在峰值压力下，工作时间要少于每分钟0.6秒。

*** If speed lower than given, consult factory or your regional manager. 如果转速低于额定，请联络工厂或您的区域经理。

1. Intermittent speed and intermittent pressure must not occur simultaneously. 严禁马达同时工作在间断工作转速和间断工作压力下。
2. Recommended filtration is per ISO cleanliness code 20/16. A nominal filtration of 25 micron or better. 推荐使用ISO清洁标准20/16的过滤标准。常规过滤精度25μm或更加。
3. Recommend using a premium quality, anti-wear type mineral based hydraulic oil HM (ISO 6743/4). 推荐使用高品质抗磨HM (ISO 6743/4)。
   If using synthetic fluids consult the factory for alternative seal materials. 如果使用合成油，请咨询工厂选配相应的密封材料。
4. Recommended minimum oil viscosity 13 mm²/s at 50°C . 推荐最低粘度13mm²/s 50摄氏度。
5. Recommended maximum system operating temperature is 82°C . 推荐最高操作温度82℃。
6. To assure optimum motor life fill with fluid prior to loading and run at moderate load and speed for 10-15 minutes. 为了延长马达寿命，请先注入油液在中等负载和速度下运转10-15分钟。

Function Diagrams 性能图

GR 50

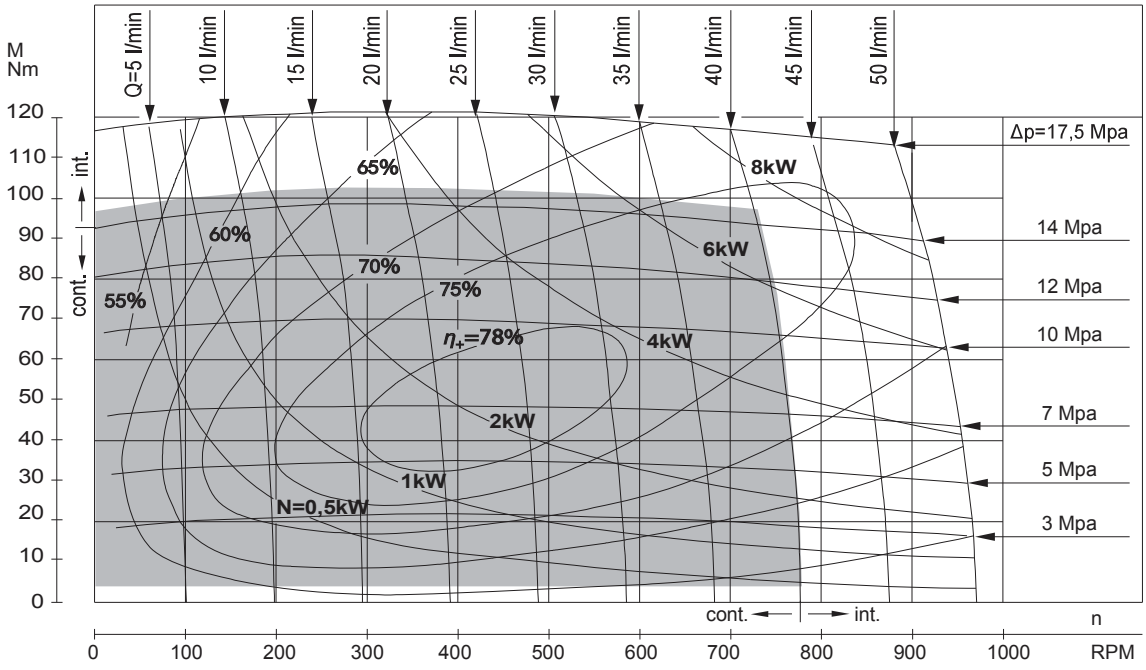

GR 80

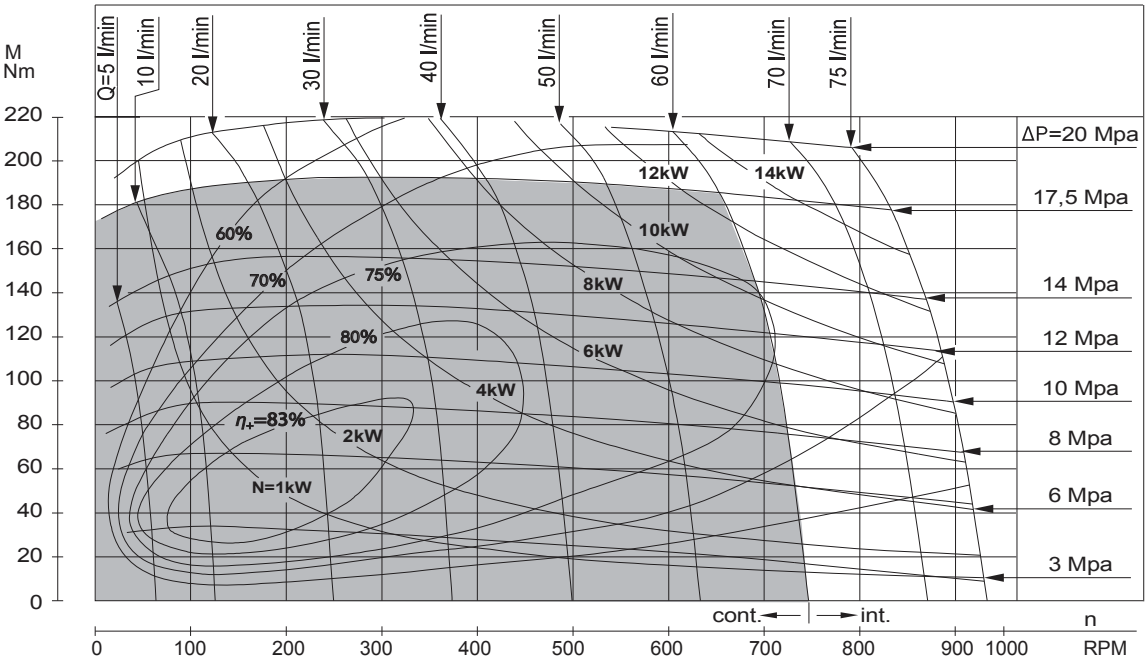

The function diagrams data is for average performance of randomly selected motors at back pressure 0.5 to 1 Mpa and oil with viscosity of 32 mm²/s at 50°C.

性能图是基于随机选出马达的平均参数，工况为背压0.5-1兆帕，粘度32 mm²/s, 50 ℃。

Function Diagrams 性能图

GR 100

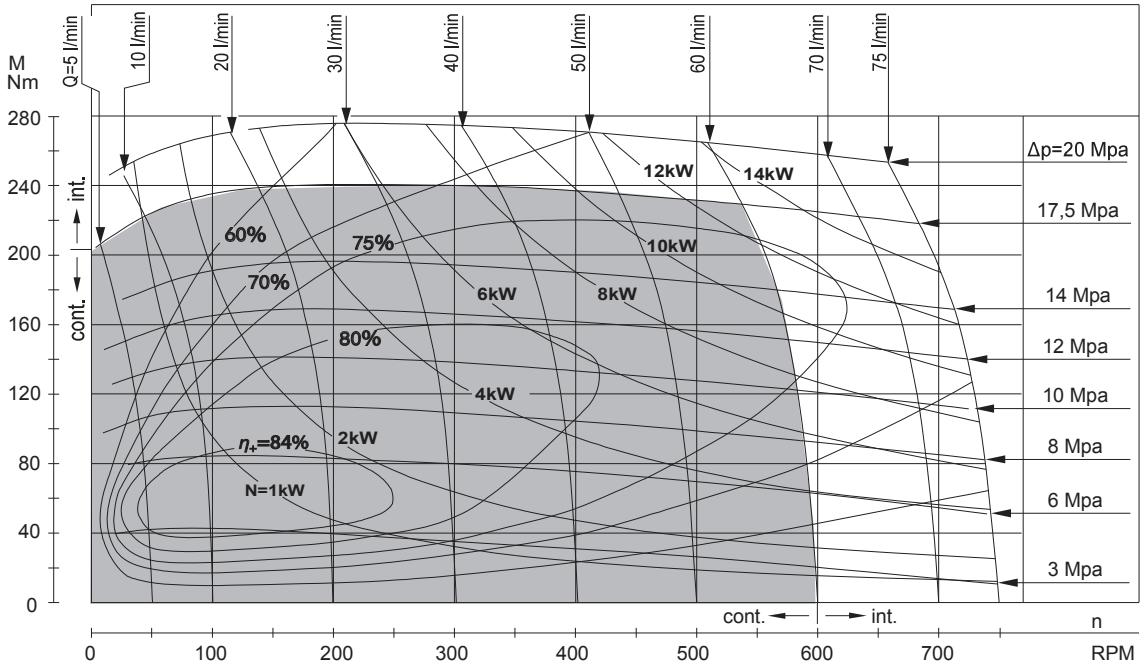

GR 125

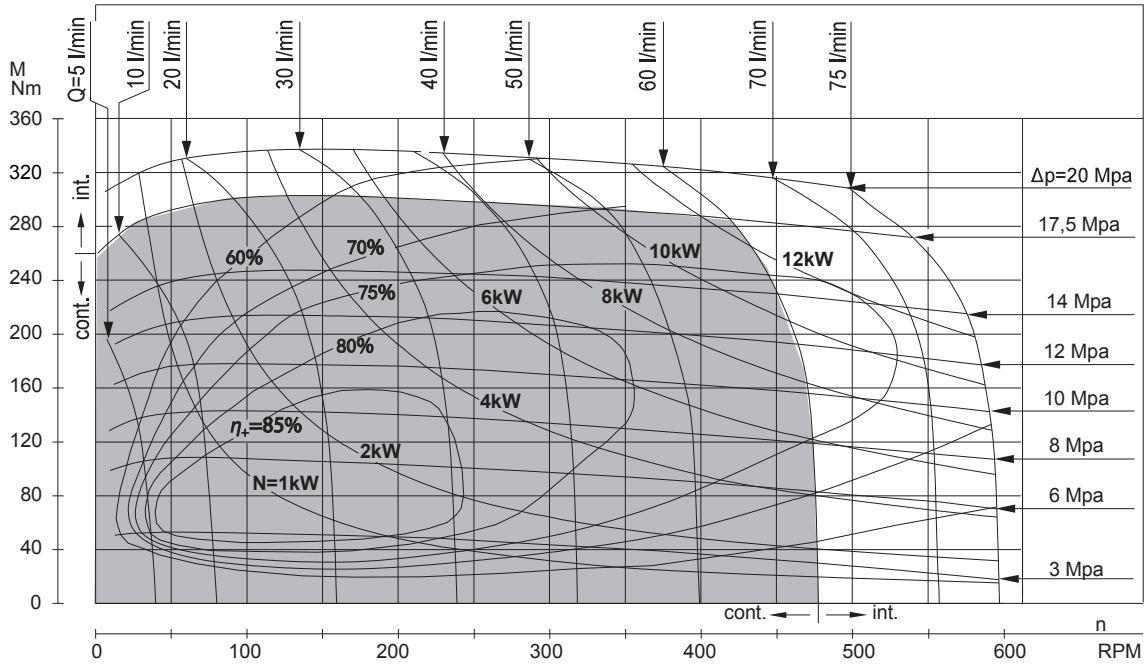

The function diagrams data is for average performance of randomly selected motors at back pressure 0.5 to 1 Mpa and oil with viscosity of 32 mm²/s at 50°C.

性能图是基于随机选出马达的平均参数，工况为背压0.5-1兆帕，粘度32mm²/s, 50 ℃。

Function Diagrams 性能图

GR 160

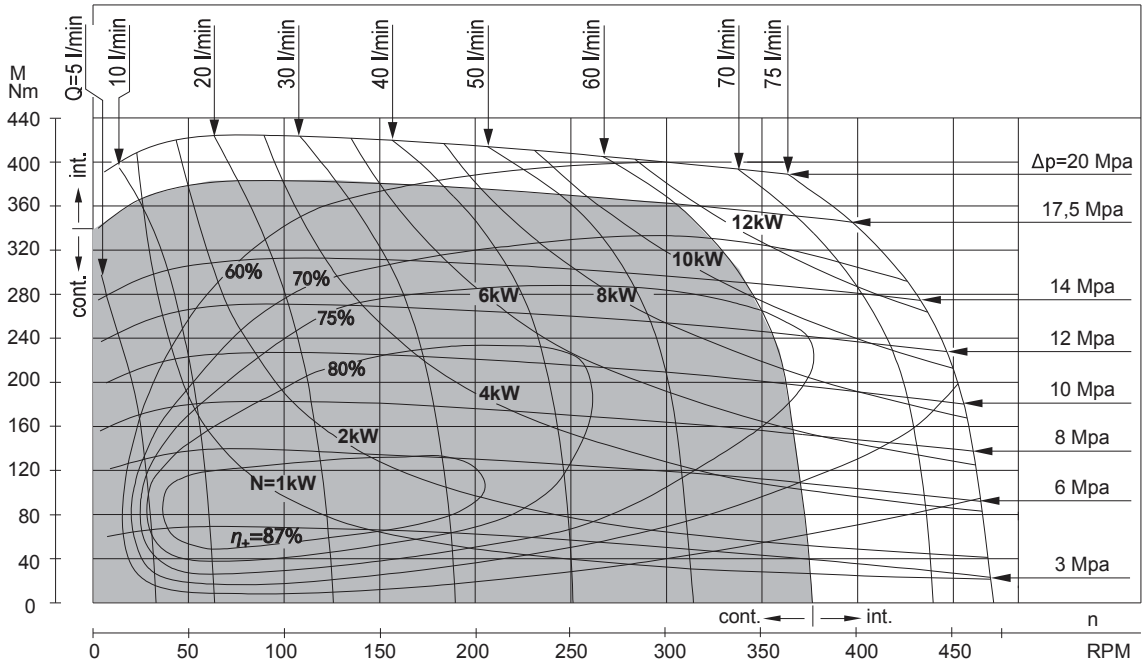

GR 200

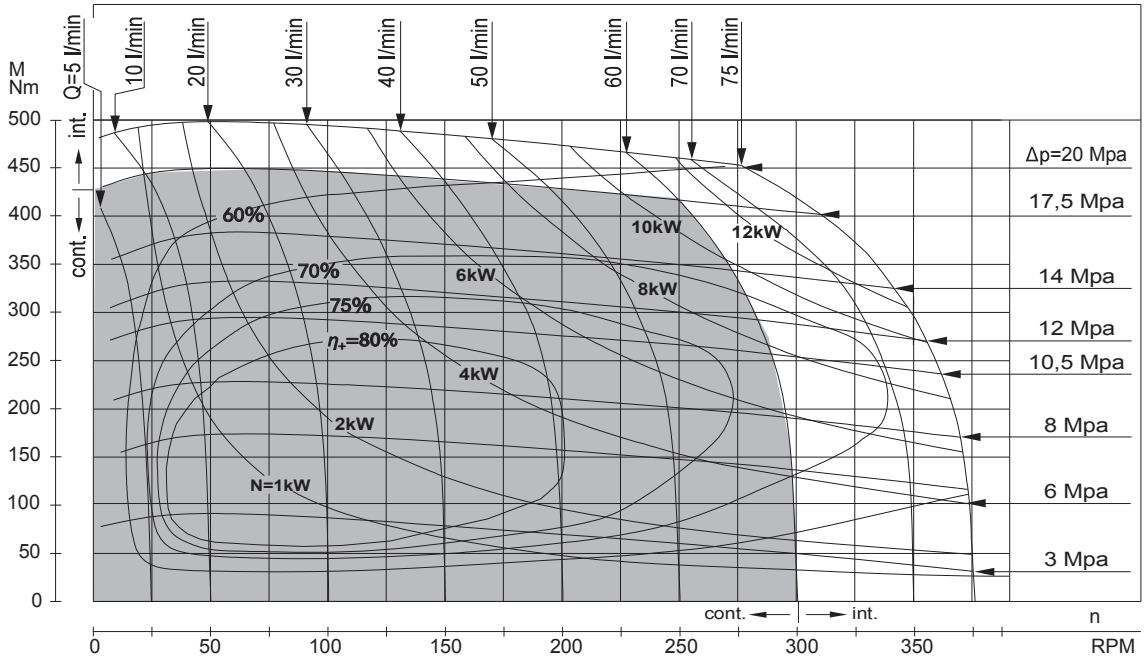

The function diagrams data is for average performance of randomly selected motors at back pressure 0.5 to 1 Mpa and oil with viscosity of 32 mm²/s at 50°C.

性能图是基于随机选出马达的平均参数，工况为背压0.5-1兆帕，粘度32mm²/s, 50 ℃。

Function Diagrams 性能图

GR 250

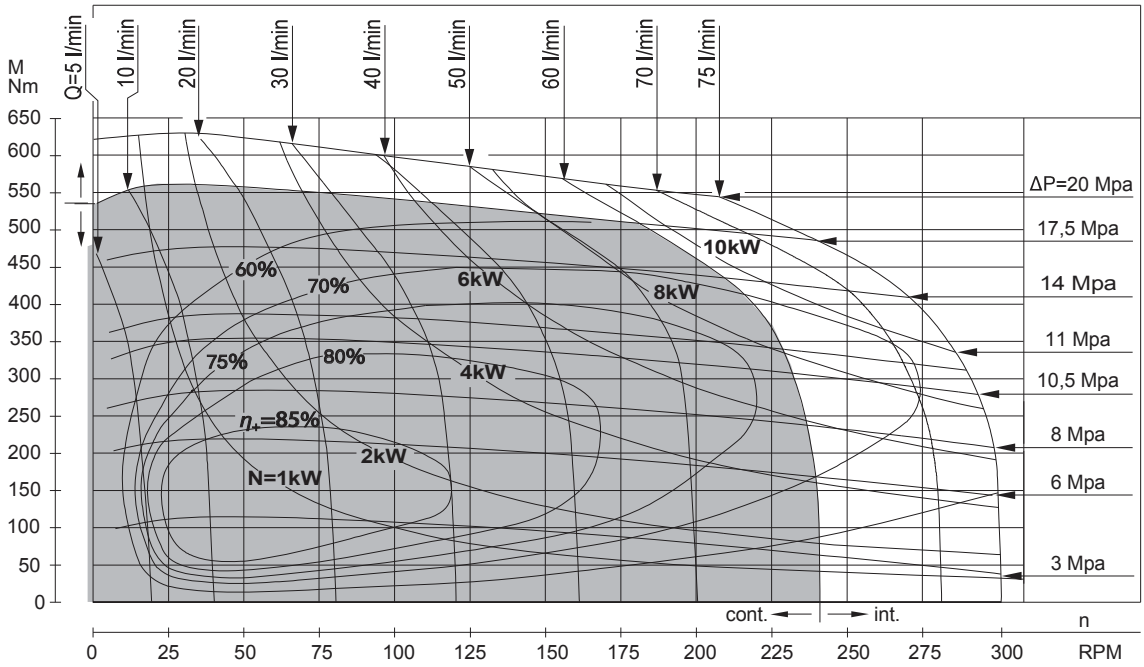

GR 315

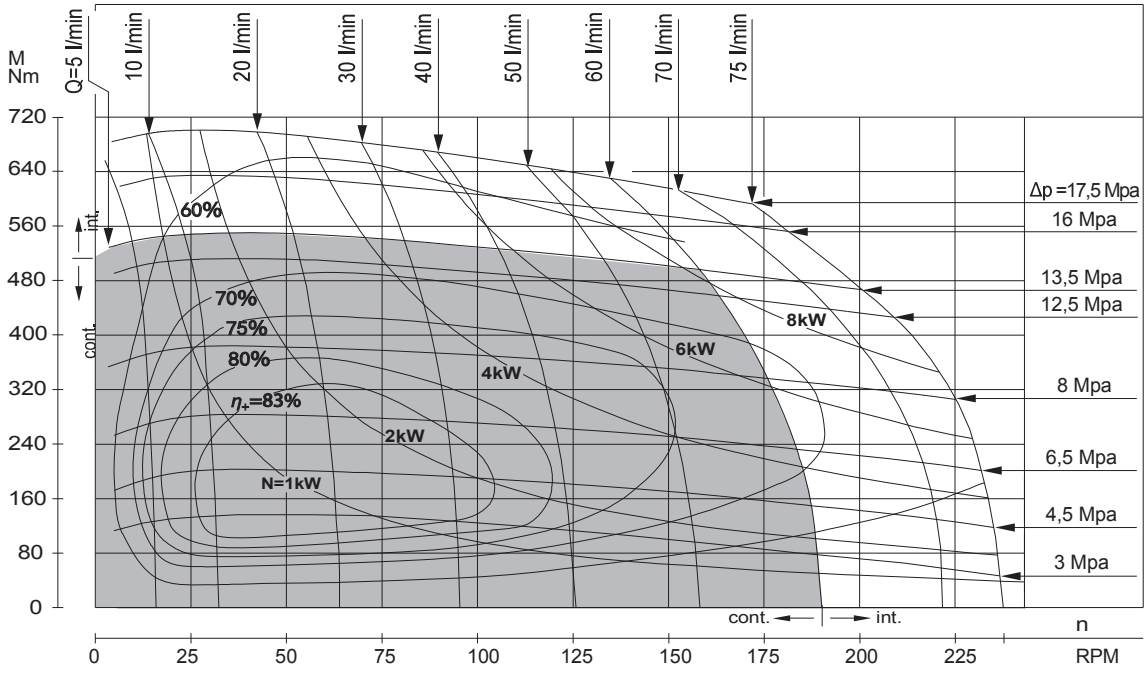

The function diagrams data is for average performance of randomly selected motors at back pressure 0.5 to 1 Mpa and oil with viscosity of 32 mm²/s at 50℃.

性能图是基于随机选出马达的平均参数，工况为背压0.5-1兆帕，粘度32mm²/s, 50 ℃。

Function Diagrams 性能图

GR 400

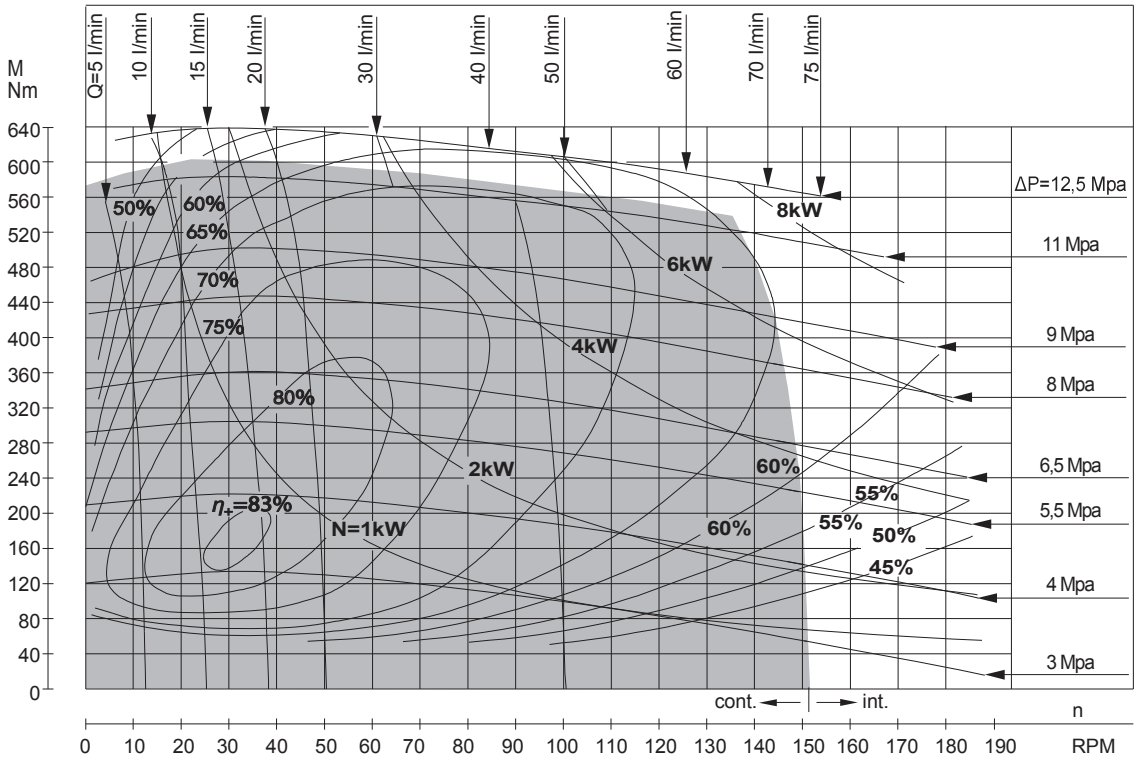

The function diagrams data is for average performance of randomly selected motors at back pressure 0.5 to 1 Mpa and oil with viscosity of 32 mm²/s at 50 ℃.

性能图是基于随机选出马达的平均参数，工况为背压0.5-1兆帕，粘度32mm²/s, 50 ℃。

Dimensions and Mounting Data 尺寸和安装参数

GR Series GR系列

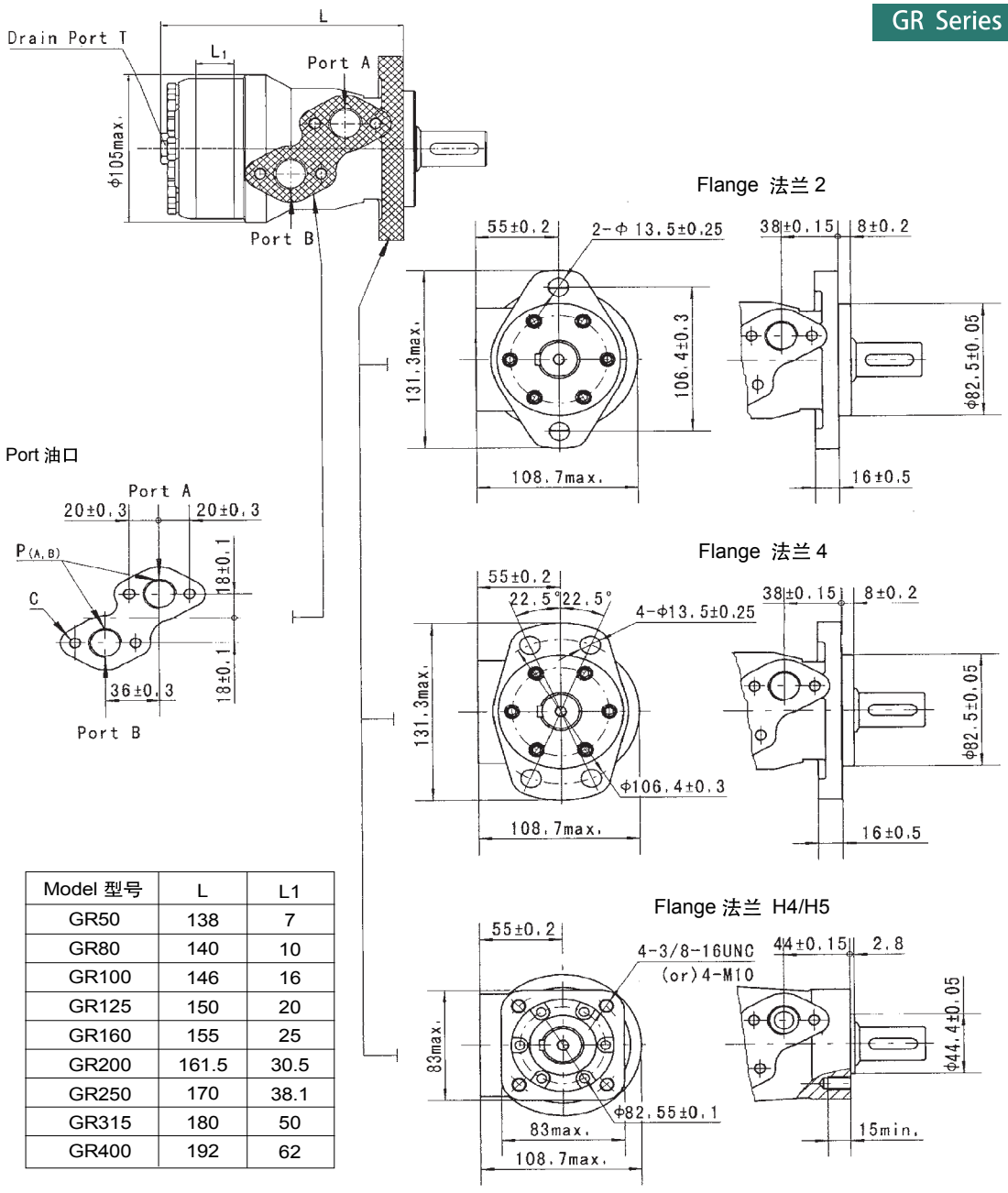

Model 型号	L	L1
GR50	138	7
GR80	140	10
GR100	146	16
GR125	150	20
GR160	155	25
GR200	161.5	30.5
GR250	170	38.1
GR315	180	50
GR400	192	62

Mounting 安装 \ Code 编号	D(Depth) 深度	M(Depth) 深度	S(Depth) 深度	P(Depth) 深度	R(Depth) 深度
P(A,B)	G1/2 (15)	M22 x 1.5 (15)	7/8-14 O-ring (17)	1/ 2-14NPTF (15)	PT(RC)1/2 (15)
C	4-M8 (13)	4-M8 (13)	4-5/16-18UNC (13)	4-5/16-18UNC (13)	4-M8 (13)
T	G1/4 (12)	M14 x 1.5 (12)	7/16-20UNF (12)	7/16-20UNF (12)	PT(RC)1/4 (9.7)

Dimensions and Mounting Data 尺寸和安装参数

GR Series GR系列

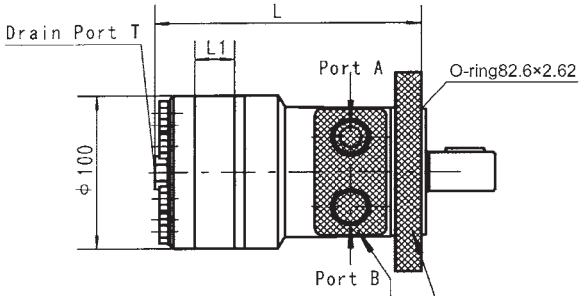

Port 油口
G、S、P、R、M1、M2、M3

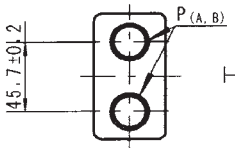

Port 油口
B4、B5

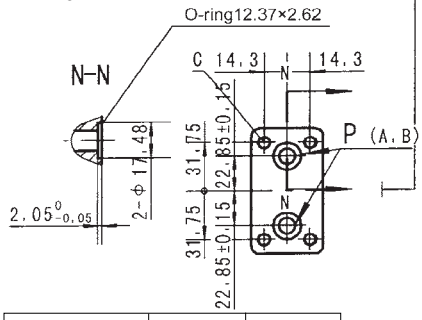

Model 型号	L	L1
GRS36	141	7
GRS50	144	10
GRS80	150	16
GRS100	154	20
GRS125	159	25
GRS160	165.5	30.5
GRS200	174	38.1
GRS250	184	50
GRS315	196	62
GRS375	208	74

Flange 法兰 H2

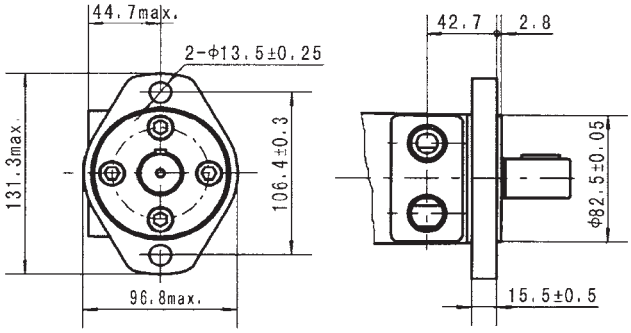

Flange 法兰 H6

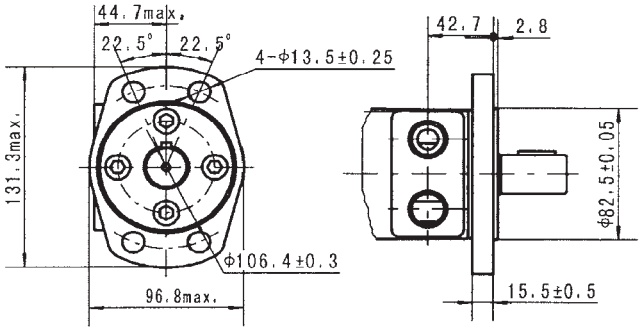

Flange 法兰 H4/H5

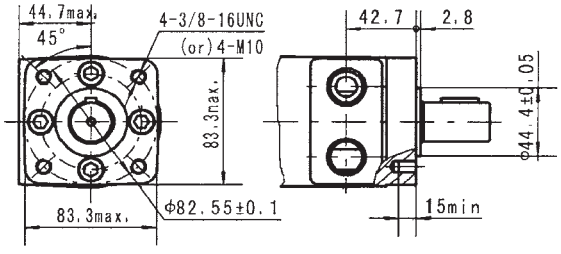

Mounting 安装 \ Code 编号	G(Depth) 深度	S(Depth) 深度	P(Depth) 深度	R(Depth) 深度	M1(Depth) 深度	M2(Depth) 深度	M3(Depth) 深度	B4(Depth) 深度	B5(Depth) 深度
P(A,B)	G1/2(15)	7/8-14 O-ring(17)	1/2-14NPTF(15)	PT(RC)1/2 (15)	M18x1.5(15)	M20x1.5(15)	M22x1.5(15)	10	10
T	G1/4(12)	7/16-20UNF(12)	7/16-20UNF(12)	PT(RC)1/4(9.7)	M10x1(12)	M10x1(12)	M10x1(12)	7/16-20UNF(12)	G1/4(12)
C	–	–	–	–	–	–	–	4-5/16-18UNC(13)	4-M8(13)

GR Shaft Extension Dimensions Data GR系列轴伸尺寸参数

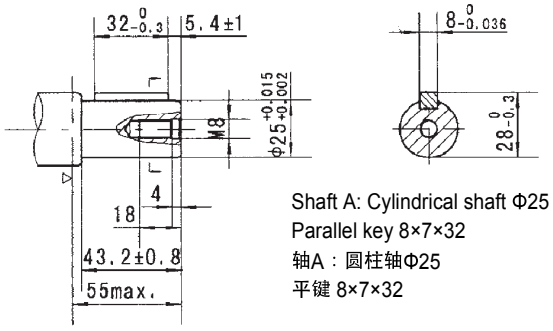

Shaft A: Cylindrical shaft Φ25
Parallel key 8×7×32
轴A：圆柱轴Φ25
平键 8×7×32

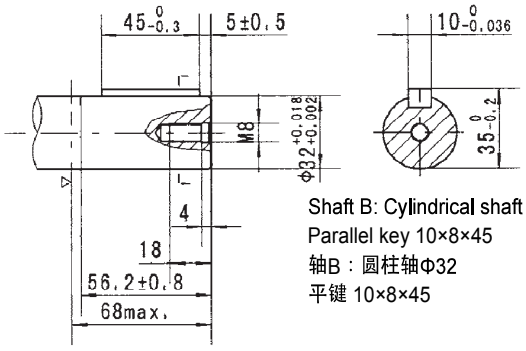

Shaft B: Cylindrical shaft Φ32
Parallel key 10×8×45
轴B：圆柱轴Φ32
平键 10×8×45

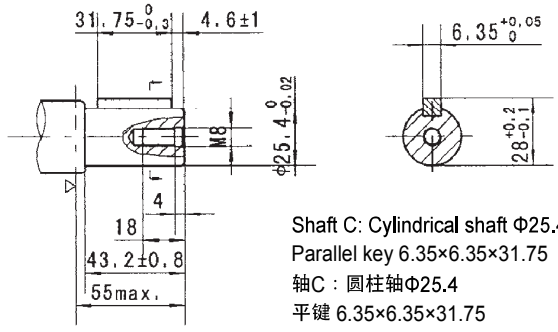

Shaft C: Cylindrical shaft Φ25.4
Parallel key 6.35×6.35×31.75
轴C：圆柱轴Φ25.4
平键 6.35×6.35×31.75

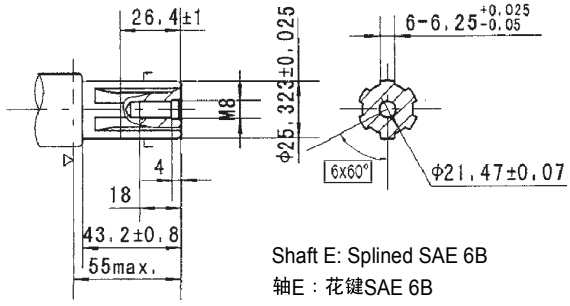

Shaft E: Splined SAE 6B
轴E：花键SAE 6B

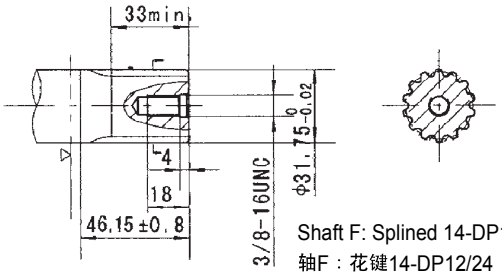

Shaft F: Splined 14-DP12/24
轴F：花键14-DP12/24

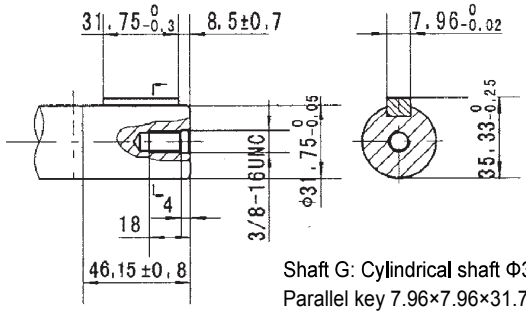

Shaft G: Cylindrical shaft Φ31.75
Parallel key 7.96×7.96×31.75
轴G：圆柱轴Φ31.75
平键7.96×7.96×31.75

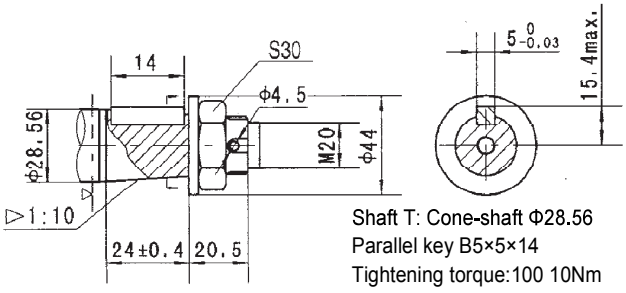

Shaft T: Cone-shaft Φ28.56
Parallel key B5×5×14
Tightening torque:100 10Nm
轴T：锥轴Φ28.56
平键B5×5×14
拧紧力矩：100 10Nm

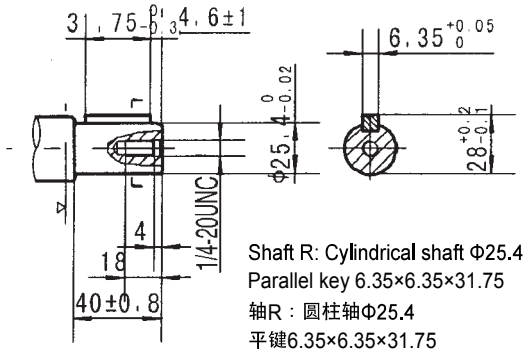

Shaft R: Cylindrical shaft Φ25.4
Parallel key 6.35×6.35×31.75
轴R：圆柱轴Φ25.4
平键6.35×6.35×31.75

GR Shaft Extension Dimensions Data GR系列轴伸尺寸参数

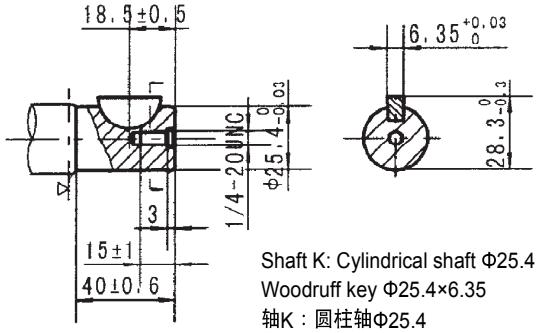

Shaft K: Cylindrical shaft Φ25.4
Woodruff key Φ25.4×6.35
轴K：圆柱轴Φ25.4
半圆键Φ25.4×6.35

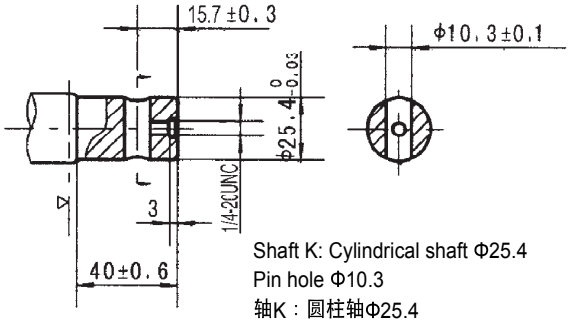

Shaft K: Cylindrical shaft Φ25.4
Pin hole Φ10.3
轴K：圆柱轴Φ25.4
销孔Φ10.3

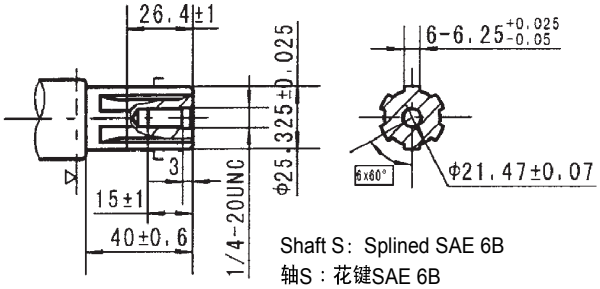

Shaft S: Splined SAE 6B
轴S：花键SAE 6B

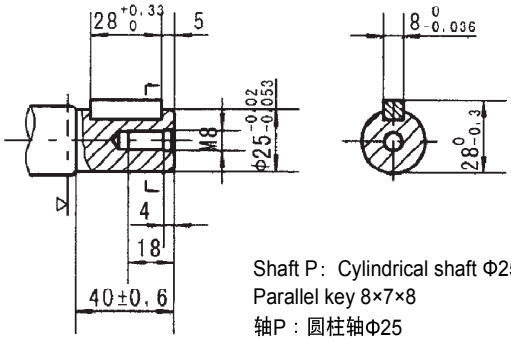

Shaft P: Cylindrical shaft Φ25
Parallel key 8×7×8
轴P：圆柱轴Φ25
平键8×7×8

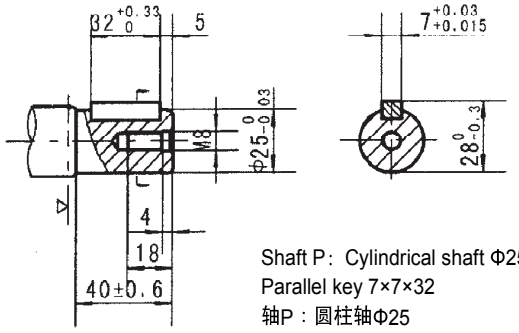

Shaft P: Cylindrical shaft Φ25
Parallel key 7×7×32
轴P：圆柱轴Φ25
平键7×7×32

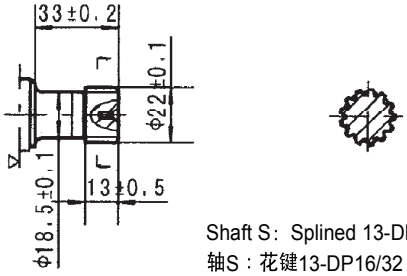

Shaft S: Splined 13-DP16/32
轴S：花键13-DP16/32

Shaft Extensions 轴伸参数

Permissible Shaft Loads for GR / GR 系列轴允许负载
The permissible radial shaft load (P_R) depends on 允许的负载取决于以下参数
Speed (n) 速度
Distance (L) from the point of losd to the mounting flange 负载点到安装法兰的距离
Mounting flange version 安装法兰的型号
Shaft version 轴的型号

Mounting flange 安装法兰	4-oval flange** 四孔法兰 2-hole oval flange 二孔法兰	4-hole oval flange 四孔法兰	Square flange** 方形法兰 2-hole oval flange 二孔法兰
Shaft version 轴型号	25 mm cylindrical shaft 25mm圆柱轴 1 in cylindrical shaft 1英寸圆柱轴 1 in splined shaft 1英寸花键轴	32 mm cylindrical shaft 32mm圆柱轴	25 mm cylindrical shaft 25 mm圆柱轴
Permissible shaft load (PR) - lin mm 允许的轴负载	$\frac{800}{n} \cdot \frac{250000\ N^*}{95+L}$	$\frac{800}{n} \cdot \frac{187500\ N^*}{95+L}$	$\frac{800}{n} \cdot \frac{250000\ N^*}{101+L}$

* n≥ 200 min-1 [rpm]; ≤55 mm
  n< 200 min-1 [rpm]; = > PRmax = 8000 N

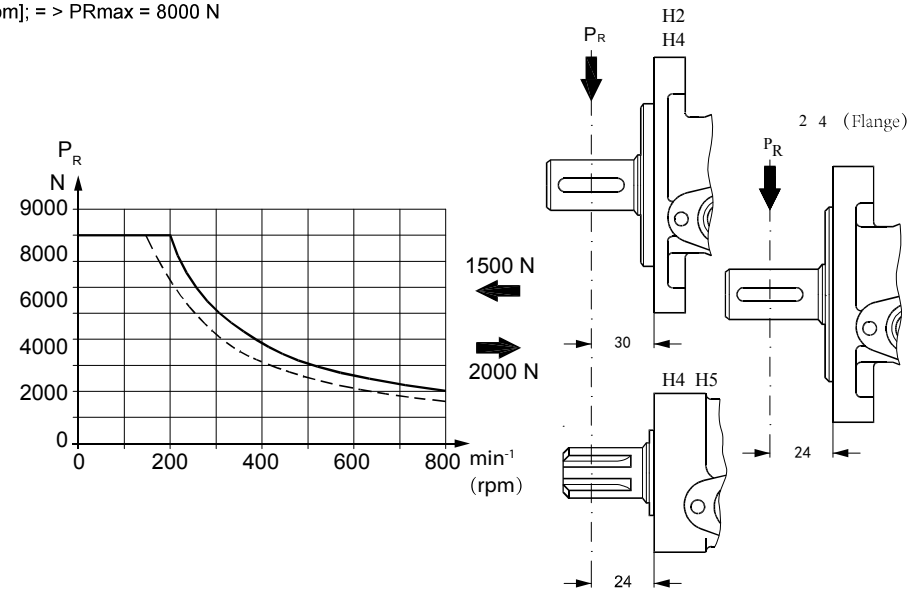

* Cylindrical shaft 32 mm 32mm圆柱轴
  Other shaft versions 其他型号的轴

* The curve shows the relation between P_R and n 曲线显示了PR和n的关系
  When l = 30 mm for motors with H2 and H6 oval mounting flange 当l=30mm 马达使用H2和H6的安装法兰
  When l = 24 mm for motors with aquare mounting flange and 2 flange 当l=24mm 马达使用方形法兰和2号法兰

Order Information 选型信息

1	2	3	4	5	6	7	8
GR	–	–	–	–	–	–	–

Pos.1	2	3		4		5		6		7		8	
Code 型号	Disp. 排量	Flange 法兰		Output Shaft 输出轴		Port and Drain Port 油口和泄油口		Rotation Direction 旋向		Paint 油漆 颜色		Unusually Function 特殊功能	
GR	36 50 80 100 125 160 200 250 315 400	2 4 H4 H5	2-Φ13.5 Rhomb-flange, Pilot Φ82.5×8 4-Φ13.5 Rhomb-flange, Pilot Φ82.5×8 4-3/8-16 Square-flange, Pilot Φ44.4×2.8 4-M10 Square-flange, Pilot Φ44.4×2.8	A B C E R F FD G T	Shaft Φ25, Parallel Key 8x7x32 Shaft Φ32, Parallel Key 10x8x45 Shaft Φ25.4, Parallel Key 6.35x6.35x31.75 Shaft Φ25.4, Splined Tooth SAE 6B Short Shaft Φ25.4, Parllel Key 6.35x6.35x31.75 Shaft Φ31.75, Splined Tooth 14-DP12/24 Long Shaft Φ31.75, Splined Tooth 14-DP12/24 Shaft Φ31.75, Parallel Key 7.96x7.96x31.75 Cone-Shaft Φ28.56, Parallel Key B5x5x14	D M S P R	G1/2 Manifold Mount 4-M8, G1/4 M22×1.5 Manifold Mount 4-M8, M14×1.5 7/8-14 O-Ring Manifold 4-5/16-18UNC, 7/16-20UNF 1/2-14 NPTF Manifold 4-5/16-18UNC, 7/16-20UNF PT(Rc)1/2 Manifold 4-M8, PT(Rc)1/4	Omit R	Standard 标准 Opposite 反向	00 Omit B S	No Paint 不涂漆 Blue 蓝色 Black 黑色 Silver Grey 银灰	Omit N 0 F LS	Standard 标准 Big Radial Force 大径向力 No Case Drain 无泄油口 Free Running 自由运行 Low Speed 低速

1	2	3	4	5	6	7	8
GRS	–	–	–	–	–	–	–

Pos.1	2	3		4		5		6		7		8	
Code 型号	Disp. 排量	Flange 法兰		Output Shaft 输出轴		Port and Drain Port 油口和泄油口		Rotation Direction 旋向		Paint 油漆颜色		Unusually Function 特殊功能	
GRS	36 50 80 100 125 160 200 250 315 400	H2 H6 H4 H5	2- Φ13.5 Rhomb-flange, Pilot Φ82.5×2.8 4-Φ13.5 Rhomb-flange, Pilot Φ82.5×2.8 4-3/8-16 Square-flange, Pilot Φ44.4×2.8 4-M10 Square-flange, Pilot Φ44.4×2.8	K S A R H H1 D I T2 P J	Shaft Φ25.4,Woodruff Key Φ25.4×6.35 Sub-Shaft Φ25.4, Splined Tooth SAE 6B Shaft Φ25 , Parllel Key 8×7×32 Shaft Φ25.4, Parllel Key 6.35×6.35×31.75 Sub-Shaft Φ25.4, Pin Hole 10.3 Shaft Φ25.4, Pin Hole 8 Shaft Φ22.22, Parllel Key 6.35×6.35×25.4 Shaft Φ22.22, Splined Tooth 13-DP16/32 Cone Shaft Φ25.4 , Woodruff Key Φ25.4×6.35 Shaft Φ25, Parallel Key 8×7×28 Shaft Φ25, Parallel Key 7×7×32	G S P T R B4 B5 M1 M2 M3	G1/2, G1/4 7/8-14 O-Ring 7/16-20UNF (G1/4) 1/2-14 NPTF, 7/16-20UNF (G1/4) 3/4-16 O-Ring, 7/16-20UNF PT(Rc)1/2, PT(Rc)1/4 10 O-Ring Manifold 4×5/16-18, 7/16-20UNF 10 O-Ring Manifold×4 M8, G1/4 M18×1.5, M10×1 M20×1.5, M10×1 M22×1.5, M10×1	Omit R	Standard 标准 Opposite 反向	00 Omit B S	No Paint 不涂漆 Blue 蓝色 Black 黑色 Silver Grey 银灰	Omit N 0 F LS	Standard 标准 Big Radial Force 大径向力 No Case Drain 无泄油口 Free Running 自由运行 Low Speed 低速

* Note: When the table is used, please fill the code of left rows in dash area and give us, which the code information is consist osf construction, displacement, mounting flange, output shaft and ports. If the specification is not in the table or you have specific requirements, please contact us.
备注：选型时，请完善左边的编码包括组成结构、排量、安装法兰、输出轴和油口。其他参数或疑问，请 直接联系我们。

Introduction of GRH's Cycloidal Hydraulic Motor GRH摆线马达简介

GENERAL INFORMATION

Cycloidal gear motors convert hydraulic energy (pressure, oil flow) into mechanical energy (torque, speed). Cycloidal gear motors operate on the principle of an internal gear (rotor) rotating within a fixed external gear (stator). The internal gear transmits the torque generated by the application of pressure from hydraulic oil fed into moto which is then delivered via the motor's output shaft. Cycloidal gear motors have high starting torque and constant output torque at wide speed range. The output shaft runs on tapered roller bearings and can absorb high axial and radial forces.

DISTRIBUTOR VALVE

GS series motors have disk valve: the distributor valve has been separated from output shaft and is driven by short cardan shaft. A balance plate counter balances the hydraulic forces around the distributor valve. It gives the motors high efficiency-even at high pressures, and good starting characteristics.

GEAR WHEEL SET

There are two forms of gear wheel set:

Gerotor set has plain teeth and roll-gerotor set with teeth fitted with rollers. The rollers reduce local stress and the tangential reaction forces on the rotor reducing friction to a minimum. This gives long operating life and better efficiency even at continuous high pressures.GS series motors have roll-gerotor set.

简介

摆线马达将液压能（压力，流量）转化成机械能（扭矩，转速）。基本原理是一个内齿轮（转子）围绕一个固定的外齿轮（定子）旋转。内齿轮将进油口压力产生的扭矩，通过输出轴传输出去。由于转速范围跨度大，它具备高启动扭矩和在宽转速范围内恒定扭矩输出的能力。

分配阀

GS系列马达带有盘式阀，分配阀从输出轴分离出来，并由万向轴驱动。配有平衡板来平衡分配阀里的液压力。即使在高压情况下也能保持高效率和良好的启动性能。

齿轮组

有2种形式的齿轮组：

滚柱齿轮有齿与滚柱啮合。滚柱可以降低作用于转子上的压力和间接的反作用力，把摩擦降到最低。这样的设计即使在连续高压的情况下，也可以保证产品的寿命增加和效率提高。GS系列都有滚柱齿轮副。

General 概述

APPLICATION 应用

» Conveyors 输送机械
» Metal working machines 金属制作业机器
» Agricultural machines 农用机械
» Road building machines 铺路机
» Mining machinery 开矿机
» Food industries 食品工业
» Special vehicles etc. 特殊设备等

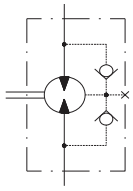

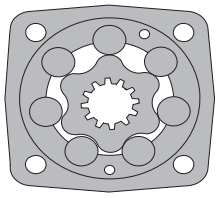

OPTIONS 可选功能

» Model-Disc valve, roll-gerotor 球形阀, 滚动转子
» Flange and wheel mount 法兰和圆形安装
» Short motor 短马达
» Motor with drum brake 马达带后制动鼓
» Tacho connection 转速器接头
» Speed sensoring 速度传感
» Side and rear ports 侧面和后面油口
» Shafts-straight, splined and tapered 轴-平键, 花键, 锥键
» SAE, metric and BSPP ports SAE 公制和BSPP油口
» Other special features 其他功能

GENERAL 一般参数

Max.Displacement 最大排量	cm^3/rev	564,9
Max.Speed 最高转速	RPM	1000
Max.Torque 最大扭矩	Nm	cont.:850 int.:990
Max.Output 最大输出功率	KW	23
Max.Pressure Drop 最大压力降	MPa	cont.:21 int.:27.5
Max.Oil Flow 最大流量	lpm	90
Min.Speed 最低转速	RPM	5
Permissible Shaft Loads 可承受轴负载	N	P_a=500
Pressure Fluid 压力油液		Mineral based-HLP(DIN 51524) or HM(ISO 6743/4)
Temperature Range 温度范围	℃	-40 to 140
Optimal Viscosity Range 黏度范围	mm^2/s	20 to 75
Filtration 过滤		ISO code 20/16 (Min.) (recommended fluid filtration of 25 microns) ISO 20/16（推荐液体过滤精度25μm）

Oil Flow in Drain Line 泄油口流量

Pressure Drop 压力降 Mpa	Viscosity 粘度 mm^2/s	Oil Flow in Drain Line 泄油口流量 lpm
14	20	1,5
	35	1
21	20	3
	35	2

Pressure Losses 压力损失

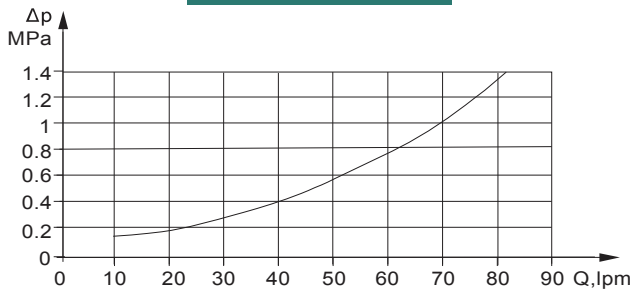

Dimensions and Mounting Data 尺寸和安装参数

Type 品名		GS 80	GS 100	GS 125	GS 160	GS 200
Displacement 排量 (cm³/rev)		80,5	100	125,7	159,7	200
Max.Speed 最高转速 (RPM)	Cont.	810	750	600	470	375
	Int.*	1000	900	720	560	450
Max.Torque 最大扭矩 (Nm)	Cont.	240	305	375	490	610
	Int.*	310	390	490	600	720
Max.Output 最大功率 (KW)	Cont.	15.5	18	18	16,5	16,5
	Int.*	19,5	22,8	22,5	23	22
Max.Pressure Drop 最大压力降 (MPa)	Cont.	21	21	21	21	21
	Int.*	27,5	27,5	27,5	27,5	27,5
	Peak**	29,5	29,5	29,5	29,5	29,5
Max.Oil Flow 最大流量 (lpm)	Cont.	65	75	75	75	75
	Int.*	80	90	90	90	90
Max.Inlet Pressure 最大进油压力 (MPa)	Peak**	23	23	23	23	23
	Int.*	29,5	29,5	29,5	29,5	29,5
	Peak**	30	30	30	30	30
Max. Return Pressure with Drain Line 最大泄油口回油压力 (MPa)	Cont.	14	14	14	14	14
	Int.*	17,5	17,5	17,5	17,5	17,5
	Peak**	21	21	21	21	21
Max.Starting Pressure with Unloaded Shaft 最大开启压力无径向荷载 (MPa)		1,2	1	1	0,8	0,8
Min. Starting Torque 最小开启扭矩 (Nm)	At max.press.drop Cont.	180	230	290	370	470
	At max.press.drop Int.*	235	300	380	460	560
Min.Speed 最低转速 (RPM)		10	10	8	8	6
Weight 重量 (kg)	GS	9,9	10,1	10,4	10,8	11,2
For Rear Ports 后油口 +0,40	GSS	7,9	8,1	8,4	8,8	9,2

*Intermittent operation: the permissible values may occur for max . 10% of every minute. 间断工况：在间断工况下工作时间每分钟要少于6秒。

** Peak load: the permissible values may occur for max . 1% of every minute. 峰值压力：在峰值压力下，工作时间要少于每分钟0.6秒。

*** For speeds lower than given, consult factory or your regional manager. 如果转速低于额定，请联络工厂或您的区域经理。

1. Intermittent speed and intermittent pressure must not occur simultaneously. 严禁马达同时工作在间断工作转速和间断工作压力下。
2. Recommended filtration is per ISO cleanliness code 20/16. A nominal filtration of 25 micron or better. 推荐使用ISO清洁标准20/16的过滤标准。常规过滤精度25μm或更加。
3. Recommend using a premium quality, anti-wear type mineral based hydraulic oil HLP(DIN51524) or HM (ISO 6743/4). 推荐使用高品质抗磨HLP(DIN51524) 或 HM (ISO 6743/4)。
   If using synthetic fluids consult the factory for alternative seal materials. 如果使用合成油，请咨询工厂选配相应的密封材料。
4. Recommended minimum oil viscosity 13 mm²/s at 50℃. 推荐最低粘度13mm²/s at 50℃。
5. Recommended maximum system operating temperature is 82℃. 推荐最高操作温度82℃。
6. To assure optimum motor life fill with fluid prior to loading and run at moderate load and speed for 10 - 15 minutes. 为了延长马达寿命，请先注入油液在中等负载和速度下运转10-15分钟。

Dimensions and Mounting Data 尺寸和安装参数

Type 品名		GS 250	GS 315	GS 400	GS 455	GS 525	GS 565
Displacement 排量 (cm³/rev)		250	314,9	397	474,6	522,7	564,9
Max.Speed 最高转速 (RPM)	Cont.	300	240	190	160	145	130
	Int.*	360	290	230	190	175	160
Max.Torque 最大扭矩 (Nm)	Cont.	720	825	865	850	850	850
	Int.*	870	1000	990	990	990	990
Max.Output 最大功率 (KW)	Cont.	14,5	15	11	8,4	7,6	6,9
	Int.*	18	17	12,	11,3	10,4	9,6
Max.Pressure Drop 最大压力降 (MPa)	Cont.	20	20	16	13	11,5	10,5
	Int.*	25	24	19	15	13,5	12,5
	Peak**	27	26	21	17	15,5	14,5
Max.Oil Flow 最大流量 (lpm)	Cont.	75	75	75	75	75	75
	Int.*	90	90	90	90	90	90
Max.Inlet Pressure 最大进油压力 (MPa)	Cont.	23	23	23	23	23	23
	Int.*	29,5	29,5	29,5	29,5	29,5	29,5
	Peak**	30	30	30	30	30	30
Max . Return Pressure with Drain Line 最大泄油口回油压力 (MPa)	Cont.	14	14	14	14	14	14
	Int.*	17,5	17,5	17,5	17,5	17,5	17,5
	Peak**	21	21	21	21	21	21
Max.Starting Pressure with Unloaded Shaft 最大开启压力,无径向载荷 (MPa)		8	8	8	8	8	8
Min. Starting Torque 最小开启扭矩 (Nm)	At max.press.drop Cont.	560	710	710	710	710	710
	At max.press.drop Int.*	700	850	840	840	840	840
Min.Speed 最低转速 (RPM)		6	5	5	5	5	5
Weight 重量 (kg)	GS	11,7	12,4	13,1	14,1	14,6	15
For Rear Ports 后油口 +0,40	GSS	9,7	10,4	11,3	12.1	12,6	13

*Intermittent operation: the permissible values may occur for max . 10% of every minute. 间断工况： 在间断工况下工作时间每分钟要少于6秒。

**Peak load: the permissible values may occur for max . 1% of every minute. 峰值压力：在峰值压力下，工作时间要少于每分钟0.6秒。

***For speeds lower than given, consult factory or your regional manager. 如果转速低于额定，请联络工厂或您的区域经理。

1. Intermittent speed and intermittent pressure must not occur simultaneously. 严禁马达同时工作在间断工作转速和间断工作压力下。
2. Recommended filtration is per ISO cleanliness code 20/16. A nominal filtration of 25 micron or better. 推荐使用ISO清洁标准20/16的过滤标准。常规过滤精度25μm或更加。
3. Recommend using a premium quality, anti-wear type mineral based hydraulic oil HLP(DIN51524) or HM (ISO 6743/4). 推荐使用高品质抗磨HLP(DIN51524) 或 HM (ISO 6743/4)。
   If using synthetic fluids consult the factory for alternative seal materials .如果使用合成油，请咨询工厂选配相应的密封材料。
4. Recommended minimum oil viscosity 13 mm2/s at 50℃.推荐最低粘度13mm²/s at 50℃。
5. Recommended maximum system operating temperature is 82℃.推荐最高操作温度82℃。
6. To assure optimum motor life fill with fluid prior to loading and run at moderate load and speed for 10- 15 minutes. 为了延长马达寿命，请先注入油液在中等负载和速度下运转10-15分钟。

Function Diagrams 性能图

GS 80

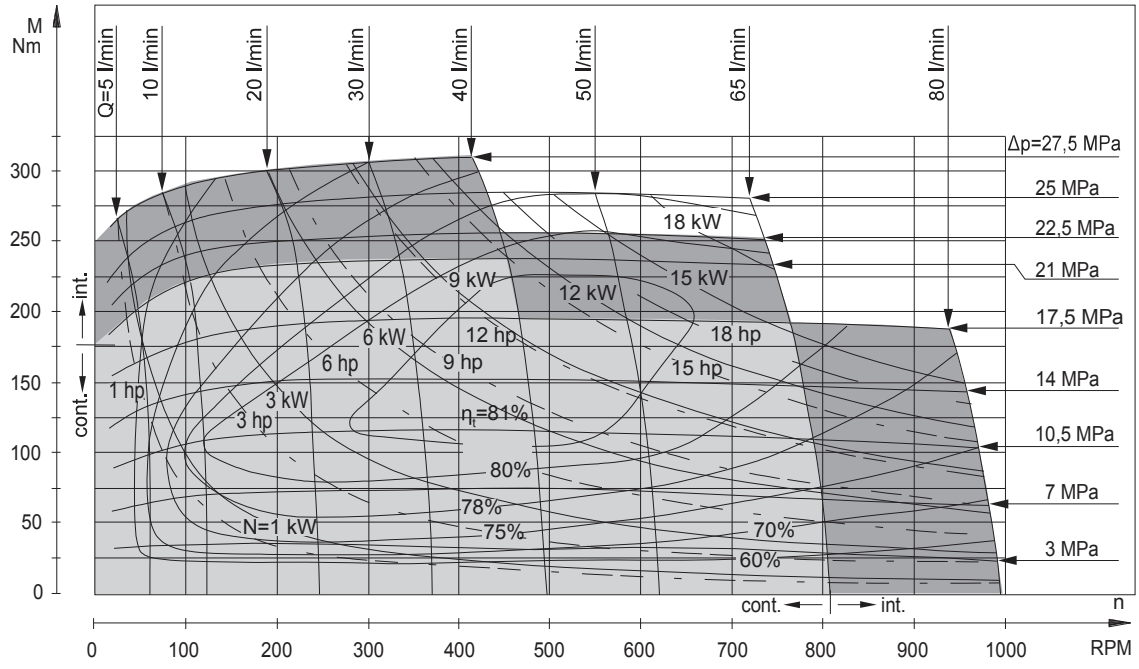

GS 100

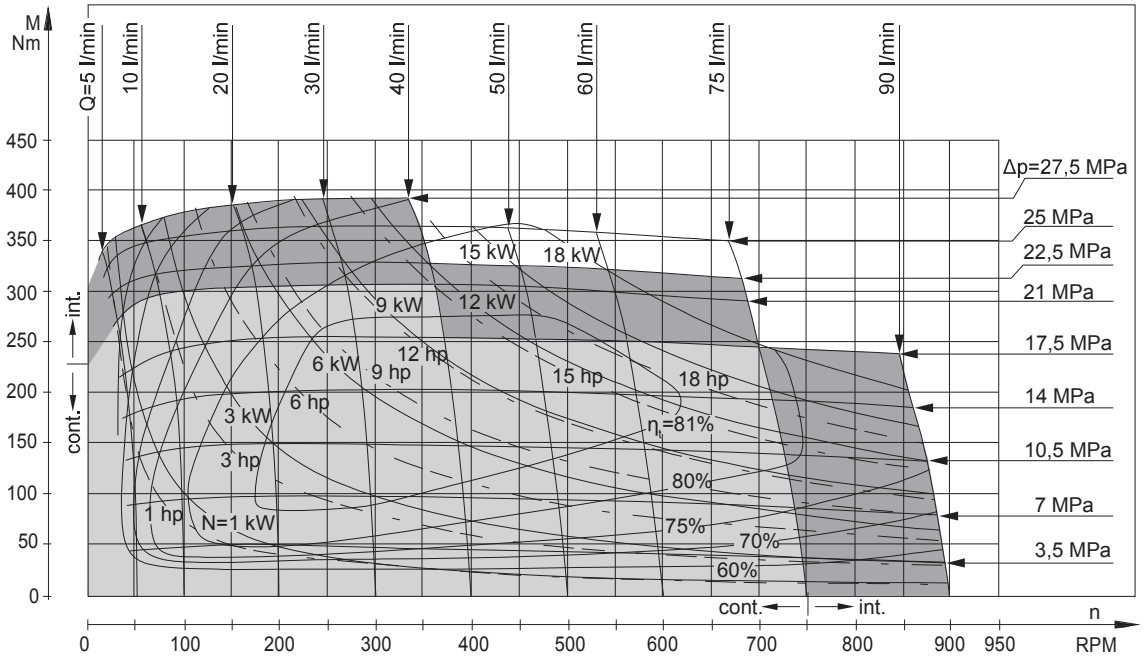

The function diagrams data is for average performance of randomly selected motors at back pressure 0.5 to 1 MPa and oil with viscosity of 32 mm²/s at 50℃.

性能图是基于随机选出马达的平均参数，工况为背压0.5-1兆帕，粘度32mm²/s, 50 ℃。

Function Diagrams 性能图

GS 125

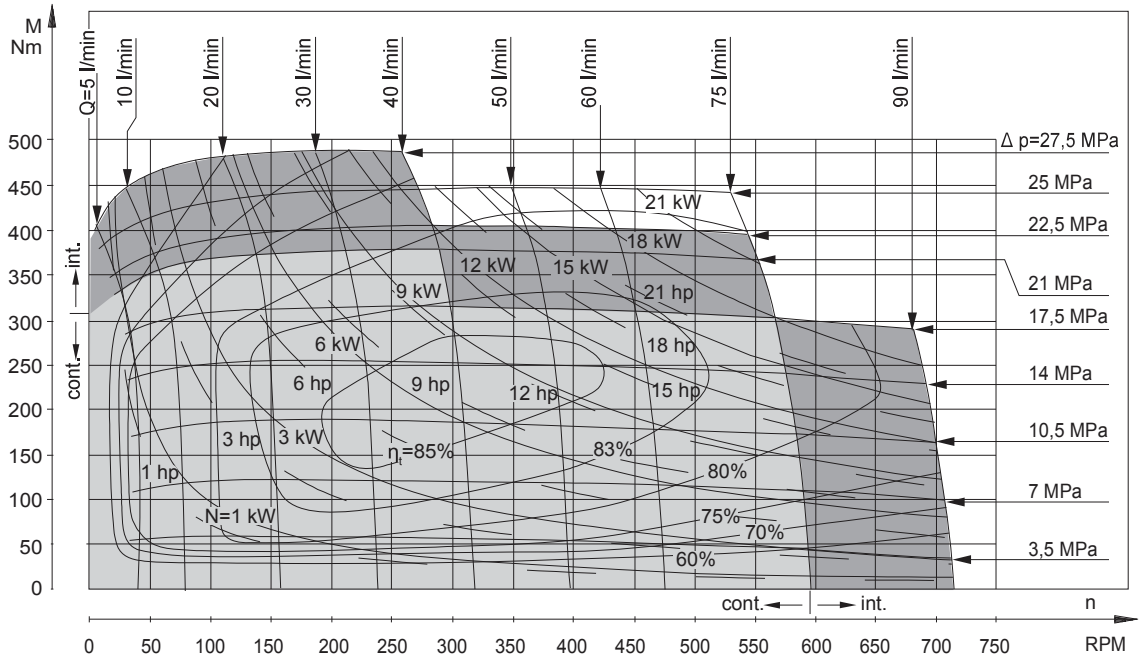

GS 160

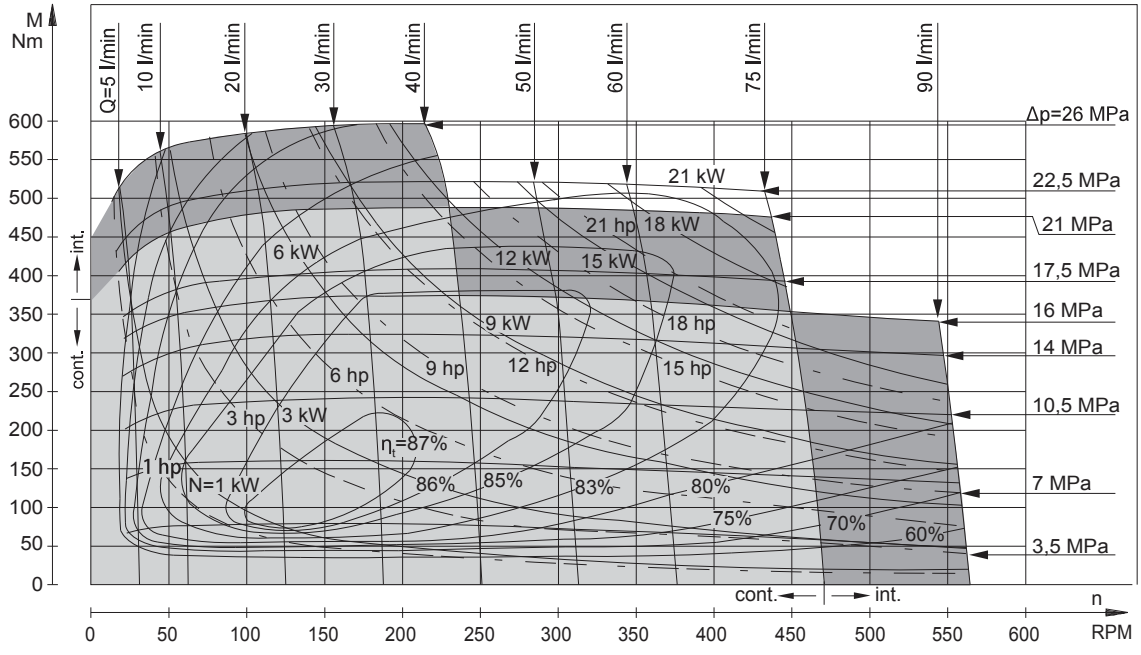

The function diagrams data is for average performance of randomly selected motors at back pressure 0.5 to 1 MPa and oil with viscosity of 32 mm²/s at 50℃.

性能图是基于随机选出马达的平均参数，工况为背压0.5-1兆帕，粘度32mm²/s, 50 ℃。

Function Diagrams 性能图

GS 200

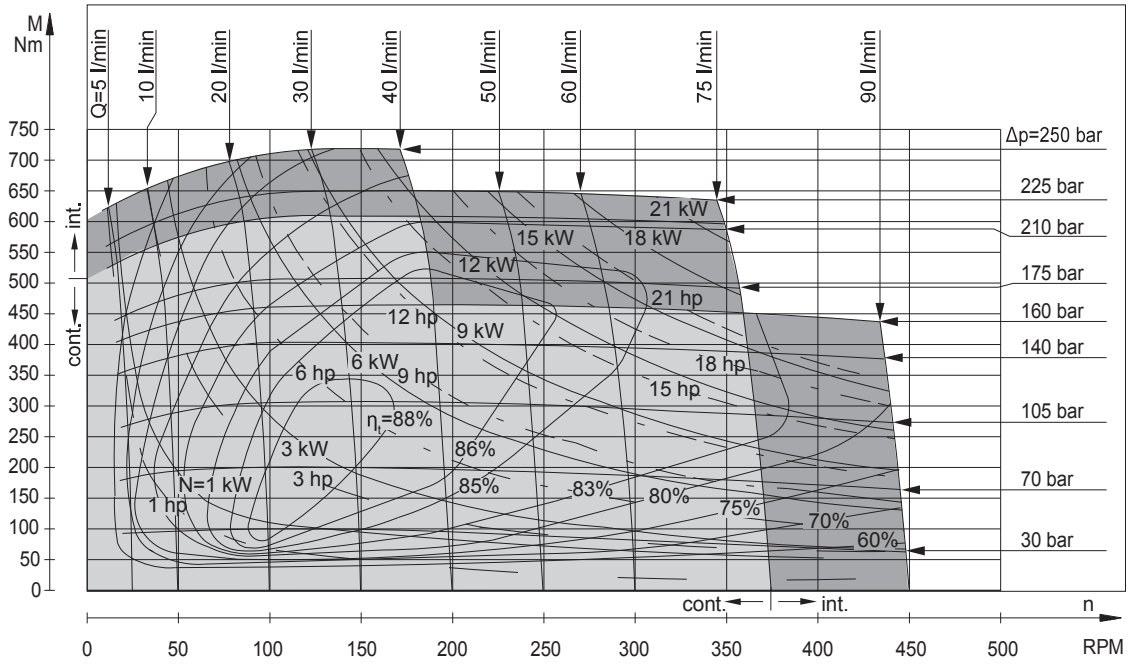

GS 250

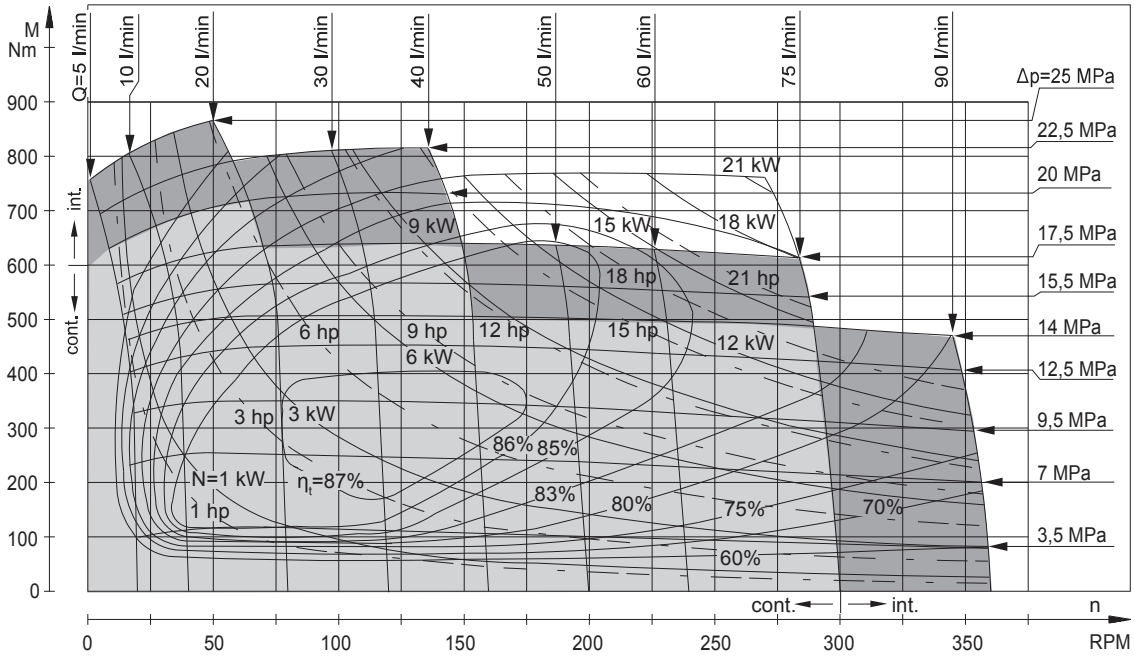

The function diagrams data is for average performance of randomly selected motors at back pressure 0.5 to 1 MPa and oil with viscosity of 32 mm²/s at 50℃.

性能图是基于随机选出马达的平均参数，工况为背压0.5-1兆帕，粘度32mm²/s, 50 ℃。

Function Diagrams 性能图

GS 315

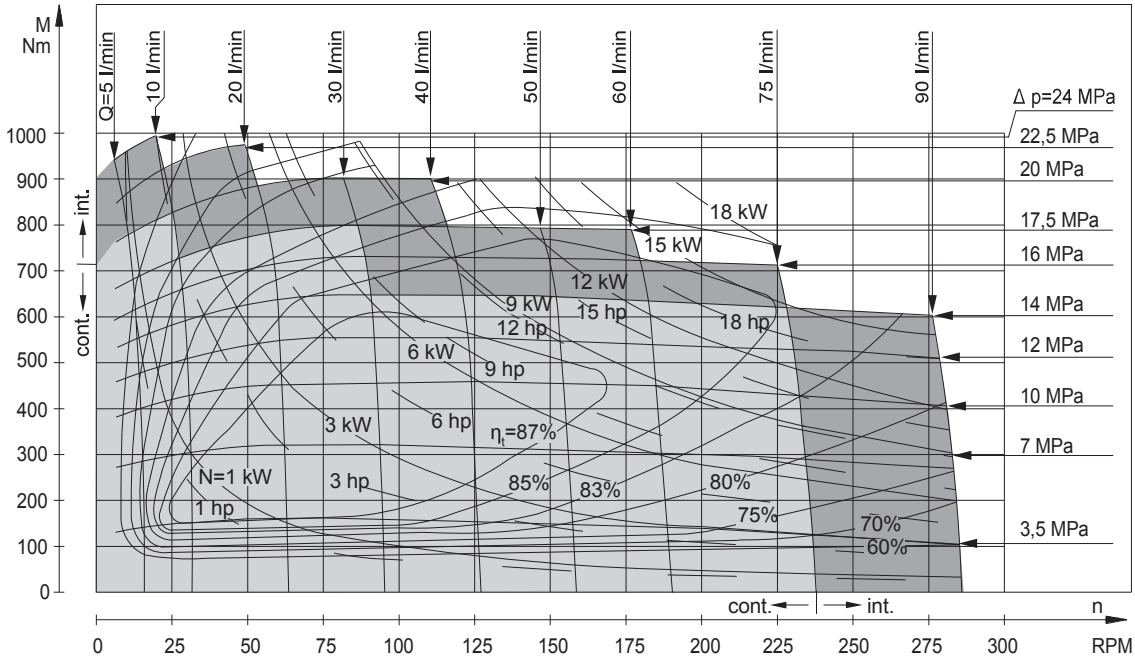

GS 400

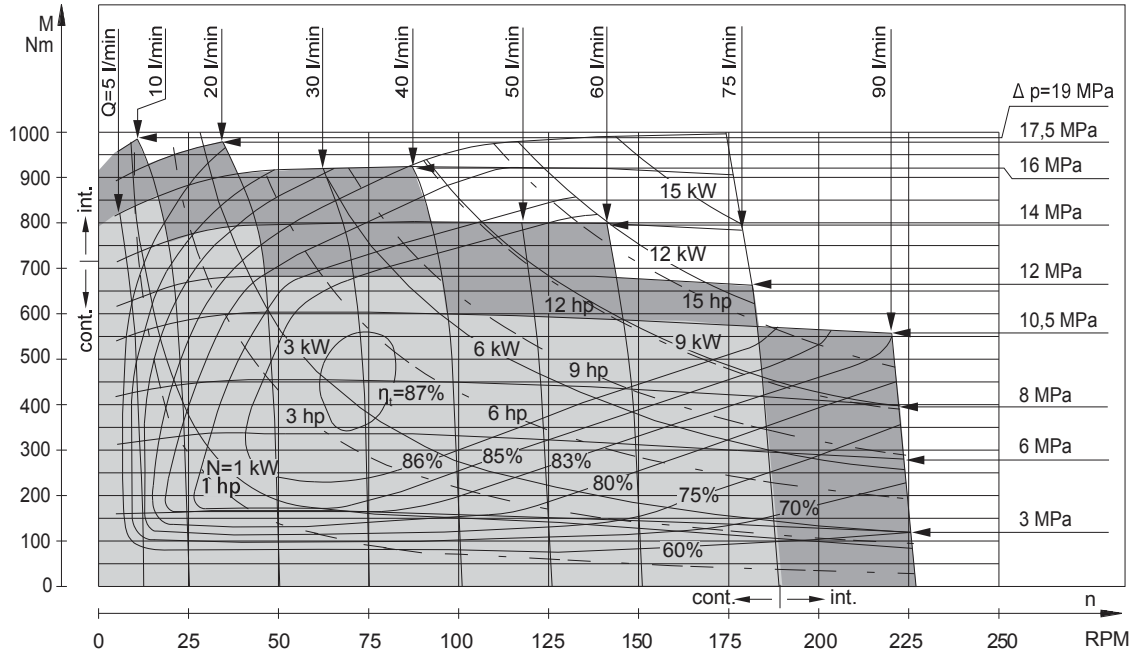

The function diagrams data is for average performance of randomly selected motors at back pressure 0.5 to 1 MPa and oil with viscosity of 32 mm²/s at 50℃.

性能图是基于随机选出马达的平均参数，工况为背压0.5-1兆帕，粘度32 mm²/s, 50 ℃。

Function Diagrams 性能图

GS 475

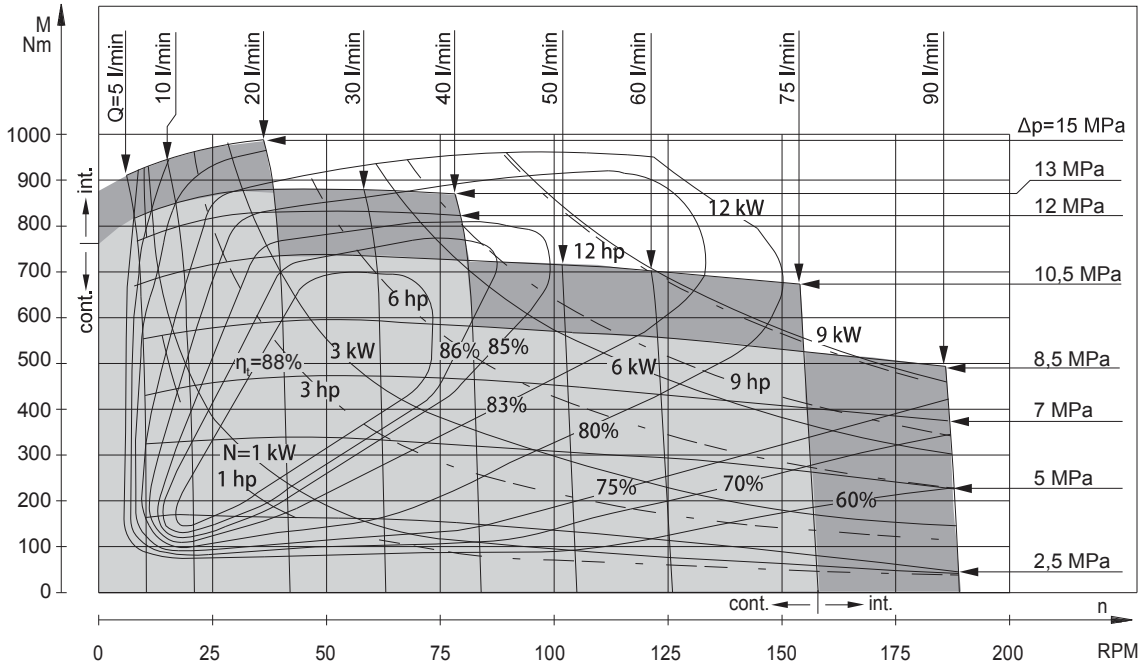

GS 525

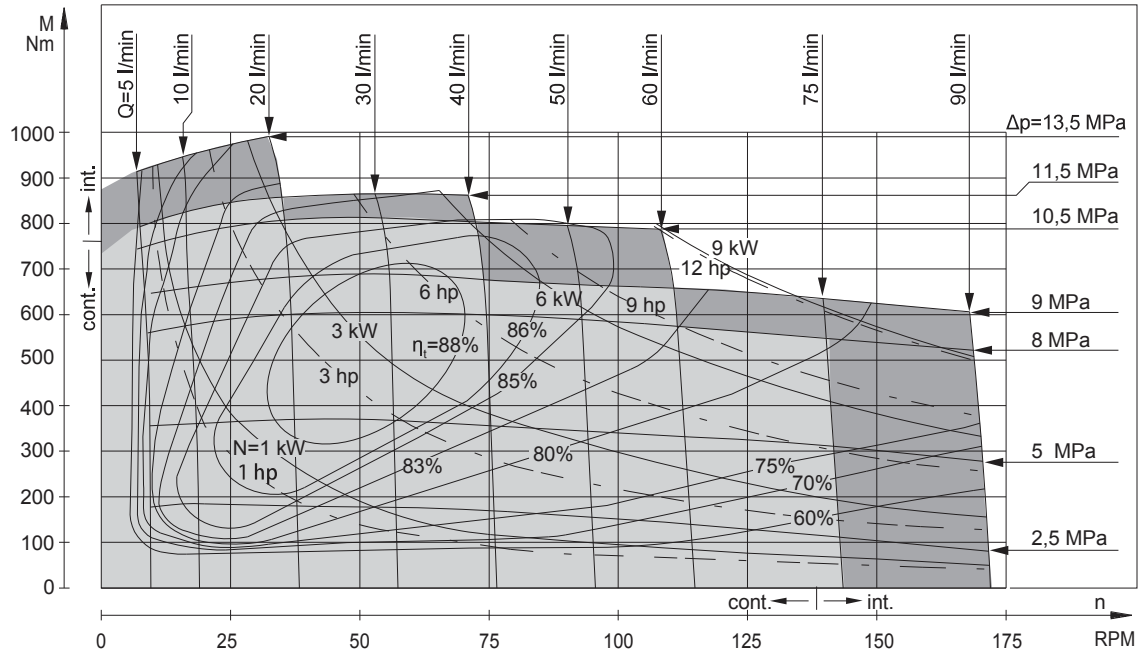

The function diagrams data is for average performance of randomly selected motors at back pressure 0.5 to 1 MPa and oil with viscosity of 32 mm²/s at 50℃.

性能图是基于随机选出马达的平均参数，工况为背压0.5-1兆帕，粘度32mm²/s, 50 ℃。

Function Diagrams 性能图

GS 565

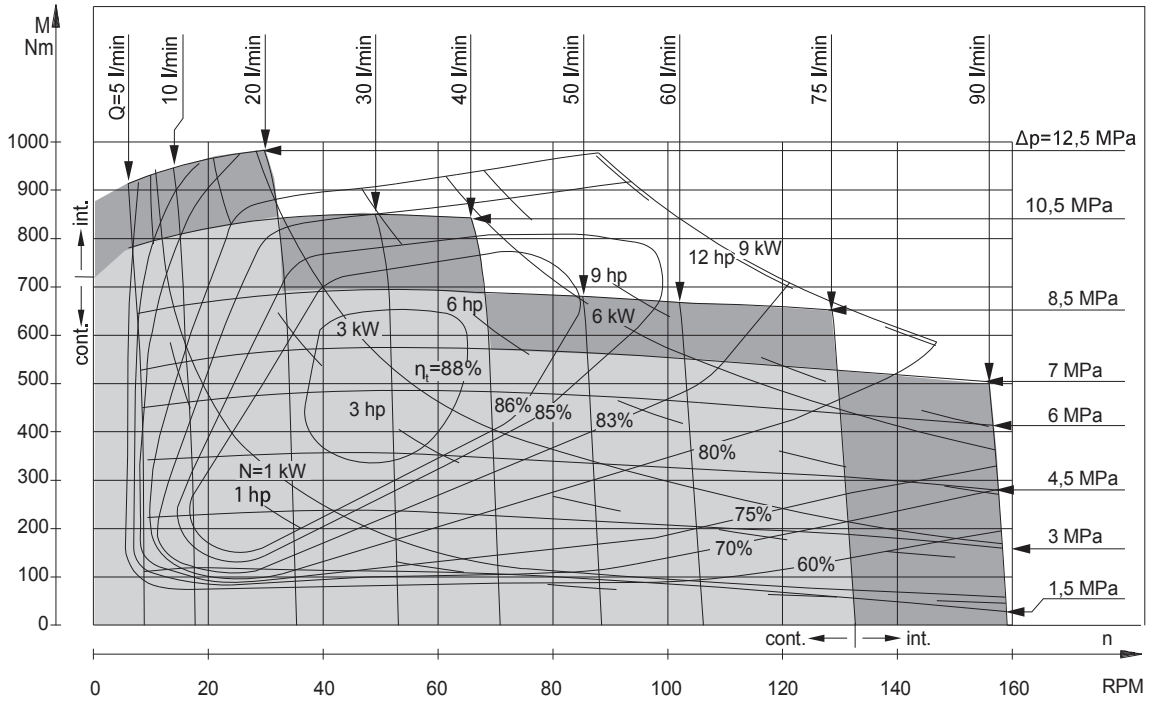

The function diagrams data is for average performance of randomly selected motors at back pressure 0.5 to 1 MPa and oil with viscosity of 32 mm²/s at 50℃.

性能图是基于随机选出马达的平均参数，工况为背压0.5-1兆帕，粘度32mm²/s, 50 ℃。

Dimensions and Mounting Data 尺寸和安装参数

GS Series GS系列

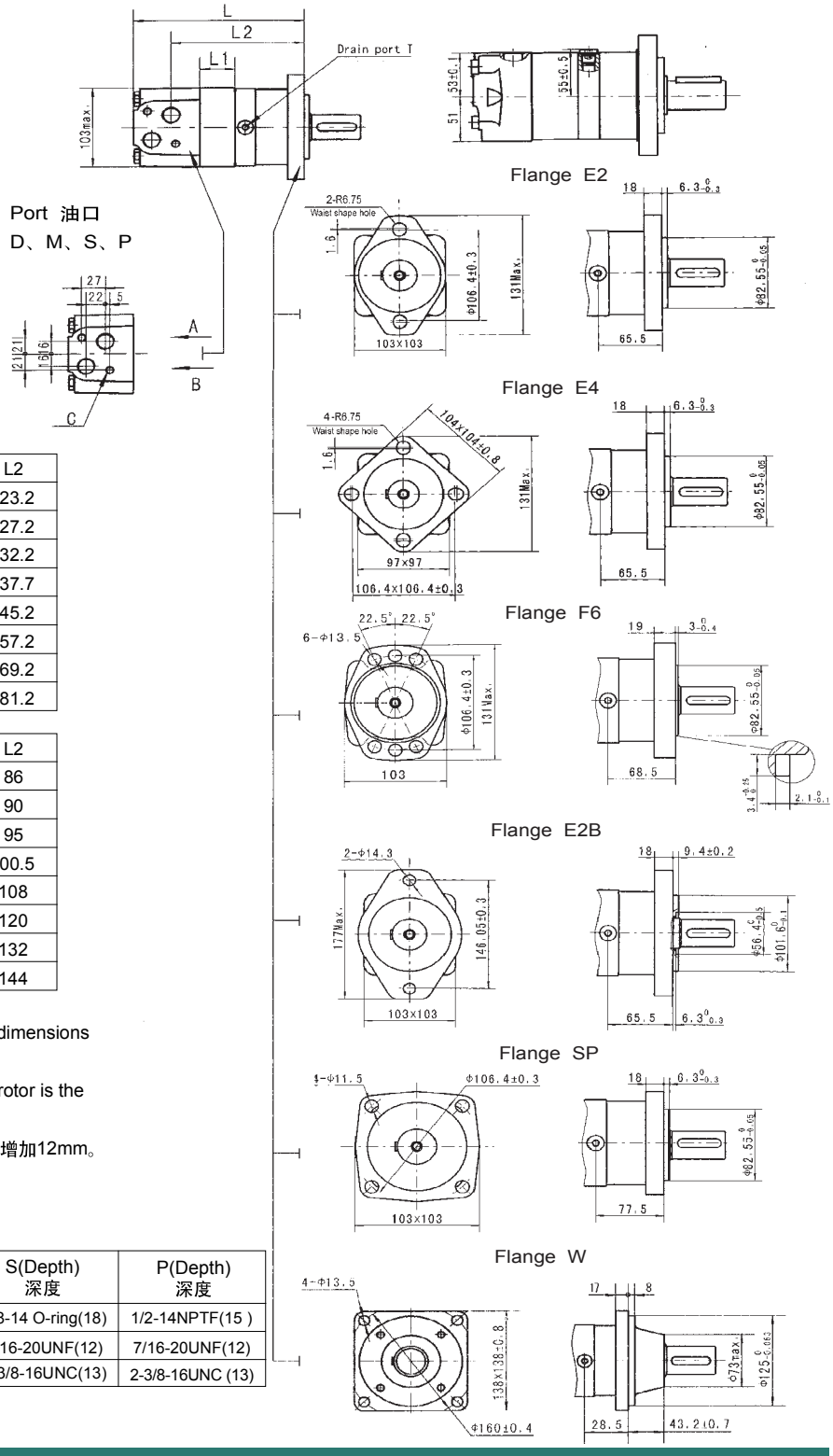

Model	L	L1	L2
GS-80	167	13	123.2
GS-100	171	17	127.2
GS-125	176	22	132.2
GS-160	181.5	27.5	137.7
GS-200	189	35.1	145.2
GS-250	201	47	157.2
GS-315	213	59	169.2
GS-375	225	71	181.2

Model	L	L1	L2
GS-80-W	129.4	13	86
GS-100-W	133.4	17	90
GS-125-W	138.4	22	95
GS-160-W	143.9	27.5	100.5
GS-200-W	151.4	35.1	108
GS-250-W	163.4	47	120
GS-315-W	175.4	59	132
GS-375-W	187.4	71	144

* Note: ① If the mounting SP is used, the dimensions of L and L2 should plus 12mm.
② The thickness of the stator and rotor is the dimension of L1 plused 3mm.

备注: ① 如果使用SP，则L和L2的尺寸需增加12mm。
② 转子的标准厚度是L1+3mm。

Code 编号 / Mounting 安装	D(Depth) 深度	M(Depth) 深度	S(Depth) 深度	P(Depth) 深度
P(A,B)	G1/2(18)	M22x1.5(18)	7/8-14 O-ring(18)	1/2-14NPTF(15)
T	G1/4(12)	M14x1.5(12)	7/16-20UNF(12)	7/16-20UNF(12)
C	2-M10(13)	2-M10(13)	2-3/8-16UNC(13)	2-3/8-16UNC (13)

Dimensions and Mounting Data 尺寸和安装参数

GSS Series GSS系列

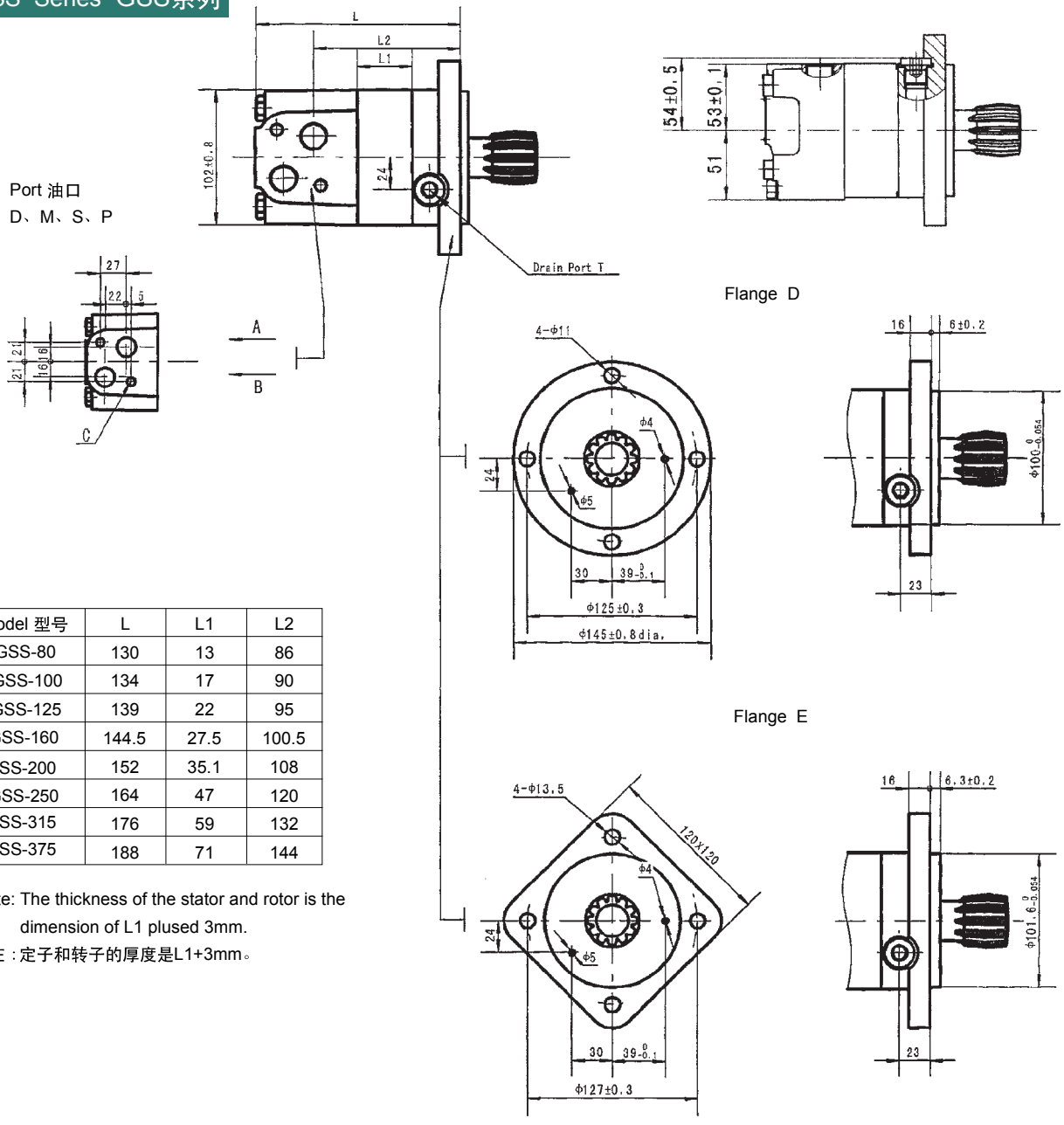

Model 型号	L	L1	L2
GSS-80	130	13	86
GSS-100	134	17	90
GSS-125	139	22	95
GSS-160	144.5	27.5	100.5
GSS-200	152	35.1	108
GSS-250	164	47	120
GSS-315	176	59	132
GSS-375	188	71	144

* Note: The thickness of the stator and rotor is the dimension of L1 plused 3mm.
备注：定子和转子的厚度是L1+3mm。

Mounting 安装 \ Code 编号	D(Depth) 深度	M(Depth) 深度	S(Depth) 深度	P(Depth) 深度
P(A,B)	G1/2(18)	M22 x 1.5(18)	7/8-14 O-ring(18)	1/2-14NPTF(15)
T	G1/4(12)	M14 x 1.5(12)	7/16-20UNF(12)	7/16-20UNF(12)
C	2-M10(13)	2-M10(13)	2-3/8-16UNC(13)	2-3/8-16UNC (13)

Dimensions and Mounting Data GS系列轴伸尺寸参数

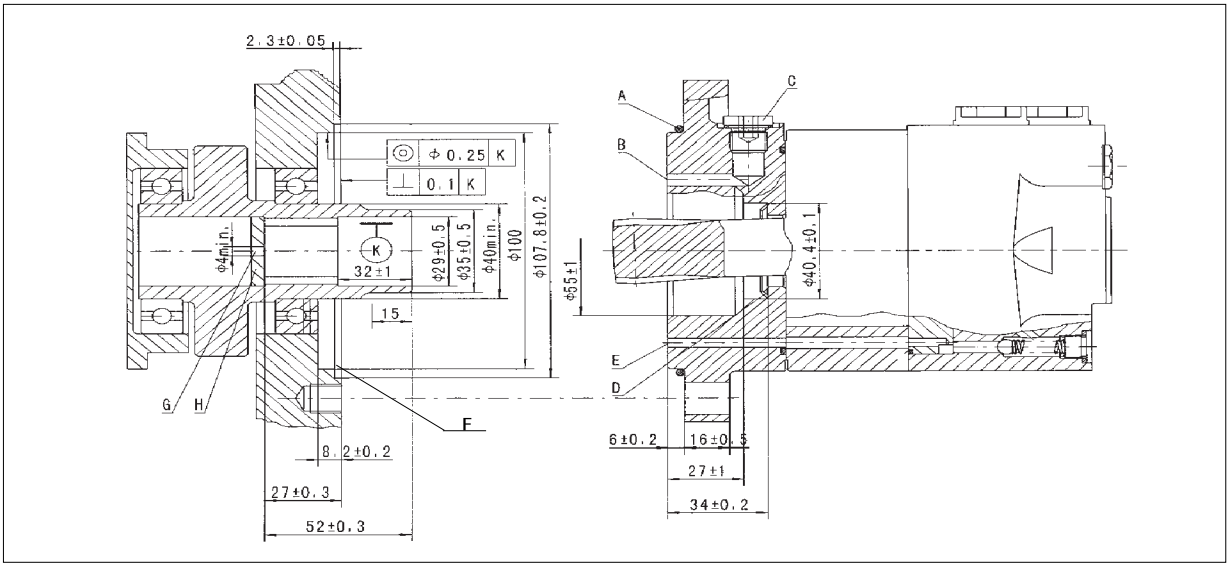

A: O-ring:100×3 O型圈：100×3
B: External drain channel 外泄通道
C: Drain connection G 1/4;12 mm deep 泄油口G1/4;12mm深
D: Conical seal ring 锥形密封圈
E: Internal drain channel 内泄通道
F: M10;min. 15mm deep M10；最小深度15mm
G: Oil circulation hole 回油孔
H: Hardened stop plate 加固挡板

Internal Spline Data for The Attached Component 随附部件内花键参数

Fillet Root Side Fit 齿侧配合		mm
Number of Teeth 齿数	Z	12
Diametral Pitch 径节	DP	12/24
Pressure Angle 压力角	°	30°
Pitch Dia. 分度圆	D	Φ25.4
Major Dia. 大径	D_{ei}	Φ 28°- 0.1
Minor Dia. 小径	D_{ii}	$\Phi 23^{+0.033}_{0}$
Space Width[Circular] 齿槽宽	E	4.308 ± 0.02

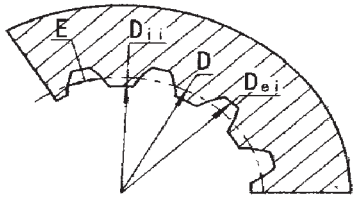

HRC 材料硬度
Hardering Specification:HRC 62±2
Effective case depth 0.7±0.2
渗碳深

Dimensions and Mounting Data 尺寸和安装参数

GSJ Series GSJ系列

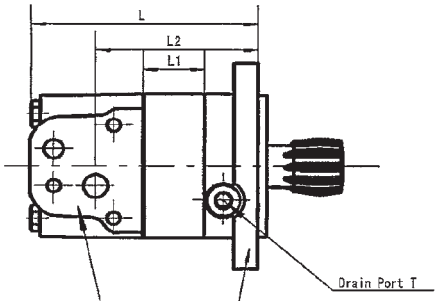

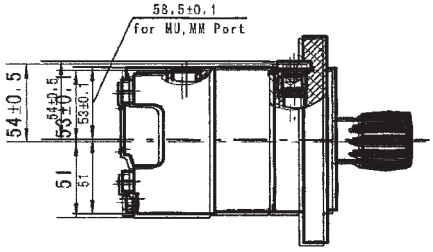

Port 油口
DB、DU、SU、SB、M4

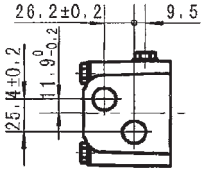

MU、MM

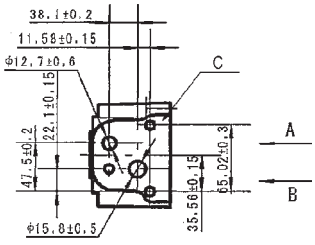

ED 1-1/16-12UN
O-ring 180°Apart Port

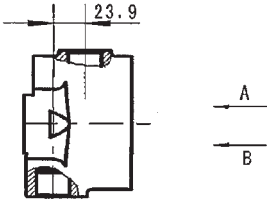

Flange J

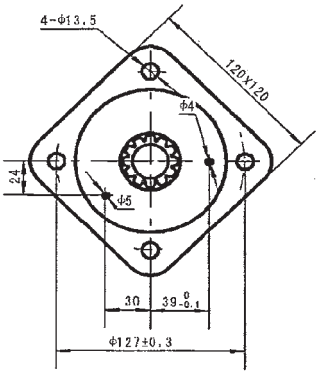

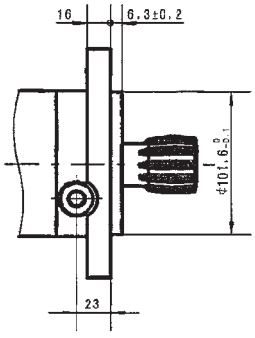

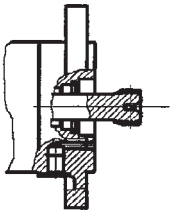

Model 型号	L	L1	L2
GSJ-80	134	13	86
GSJ-100	138	17	90
GSJ-125	143	22	95
GSJ-160	148.5	27.5	100.5
GSJ-200	156	35.1	108
GSJ-250	168	47	120
GSJ-315	180	59	132
GSJ-375	192	71	144

* Note: ① If the porting MU MM S2 is used, the dimensions of L2 should reduce 1.5mm and L should reduce 4mm.
② If the porting ED is used, the dimensions of L2 should add 2.5mm and L should add 2mm.
③ The thickness of the stator and rotor is the dimension of L1 plused 3mm.

备注: ① 如果使用MU,MM,S2,L2的尺寸减短1.5mm，Ls减短4mm；
② 如果使用油口ED,L2的尺寸增加2.5mm，L尺寸增加2mm；
③ 定子和转子的厚度是L1加3mm。

Code 编号 / Mounting 安装	DB(Depth) 深度	DU(Depth) 深度	SU(Depth) 深度	SB(Depth) 深度	M4(Depth) 深度	MU	MM	EU(Depth) 深度
P(A,B)	G1/2(18)	G1/2(18)	7/8-14 O-ring (18)	7/8-14 O-ring (18)	M22 x 1.5(18)	Φ12.7、Φ15.8	Φ12.7、Φ15.8	1-1/16-12UN (18)
T	G1/4(12)	7/16-20UNF(12)	7/16-20UNF(12)	G1/4 (12)	M14 x 1.5(12)	7/16-20UNF(12)	G1/4 (12)	7/16-20UNF(12)
C	--					3 x 3/8-16UNC	3 x M10	--

Dimensions and Mounting Data 尺寸和安装参数

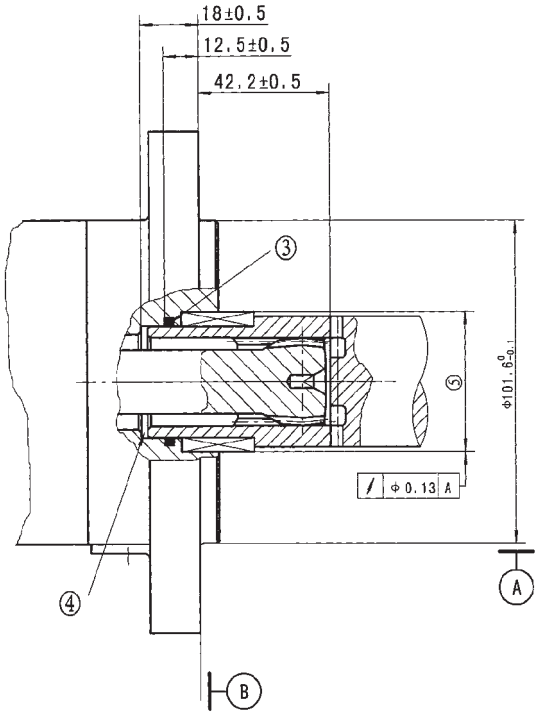

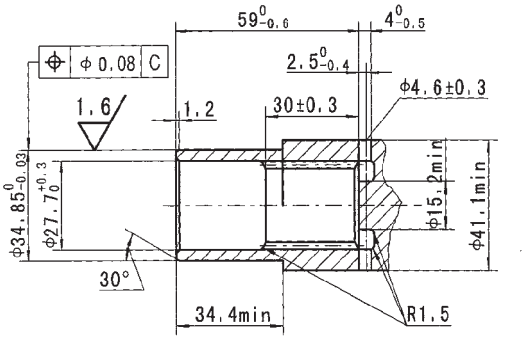

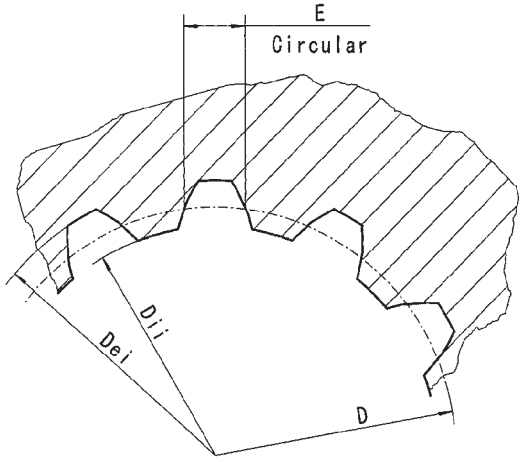

INTERNAL SPLINE DATA FOR THE ATTACHED COMPONENT
内花键参数

Fillet Root Side Fit 齿侧配合		mm
Number of Teeth 齿数	Z	12
Diametral Pitch 径节	DP	12/24
Pressure Angle 压力角	°	30°
Pitch Dia. 分度圆	D	Φ25.4
Major Dia. 大径	D_{ei}	$\Phi 27.6^{+0.14}_{0}$
Minor Dia. 小径	D_{ii}	$\Phi 23.1^{+0.12}_{0}$
Space Width[Circular] 齿槽宽	E	4.282±0.036
Dimension between two pins(Φ3.38）棒间距	M_e	19.02-19.19

① Internal spline in mating part to be per data.Specification material to be ASTM, A304,8620H.Vacuum degassed alloy steel carborize to a hardness of 58-62 HRC with case depth (to 50 HRC) of 0.75-1 (dimensions apply after heat treat).

② Mating part to have critical dimensions as shown,Oil holes must be provided and open for proper oil circulation.

③ Some means of maintaining clearance between shaft and mounting flange must be provided.

④ Seal to be furnished with motor for proper oil circulation thru splines.

⑤ Counterbore designed to adapt to a standard sleeve bearing 35.010-35.040 ID by 44.040-44.070 O.D.(Oilite Bronze Sleeve Bearing AAM3544-22).

① 相互配合的内花键见数据表，材料规格按照ASTM，A304，8620H，真空处理的合金碳钢硬度可达58-62HRC，硬化层深度为0.75-1。（热处理后深度）

② 结合件临界尺寸如图必须提供油口以便油路循环。

③ 轴和安装孔间需要保留一定的间隙。

④ 马达密封件保障油液通过花键轴循环。

⑤ 壳体孔的尺寸符合铜套轴承外径35.010-35.040， 内径44.040-44.070。(壳体孔的尺寸符合铜套轴承 AAM3544-22的安装要求)

GS Series Technical Literature 轴伸参数

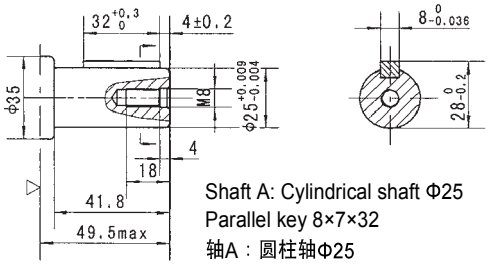

Shaft A: Cylindrical shaft Φ25
Parallel key 8×7×32
轴A：圆柱轴Φ25
平键8×7×32

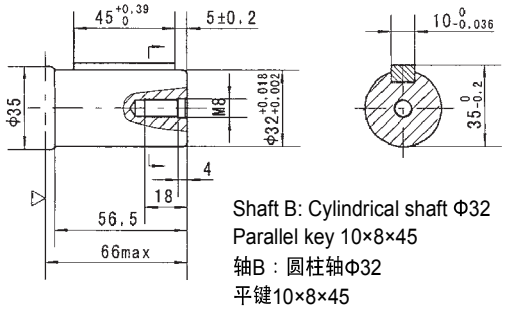

Shaft B: Cylindrical shaft Φ32
Parallel key 10×8×45
轴B：圆柱轴Φ32
平键10×8×45

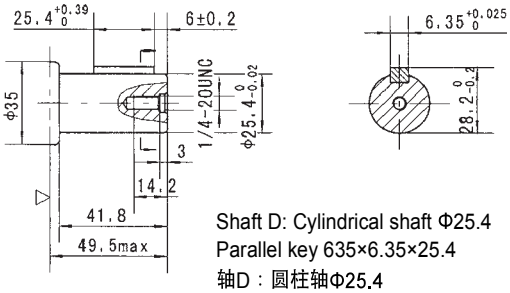

Shaft D: Cylindrical shaft Φ25.4
Parallel key 635×6.35×25.4
轴D：圆柱轴Φ25.4
平键635×6.35×25.4

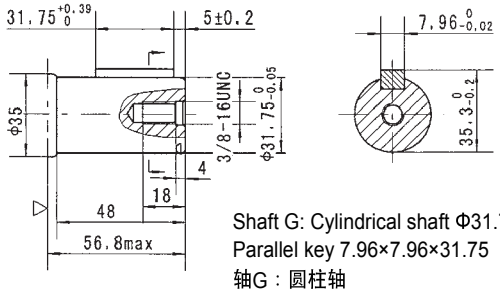

Shaft G: Cylindrical shaft Φ31.75
Parallel key 7.96×7.96×31.75
轴G：圆柱轴
平键7.96×7.96×31.75

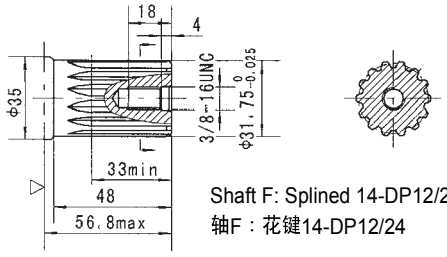

Shaft F: Splined 14-DP12/24
轴F：花键14-DP12/24

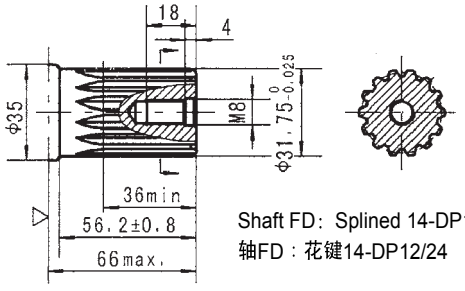

Shaft FD：Splined 14-DP12/24
轴FD：花键14-DP12/24

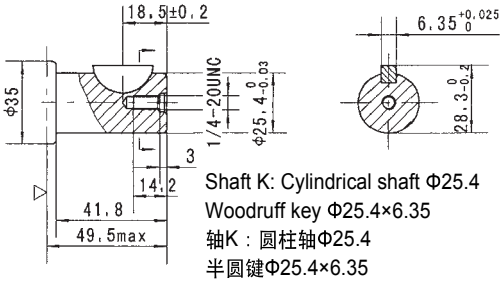

Shaft K: Cylindrical shaft Φ25.4
Woodruff key Φ25.4×6.35
轴K：圆柱轴Φ25.4
半圆键Φ25.4×6.35

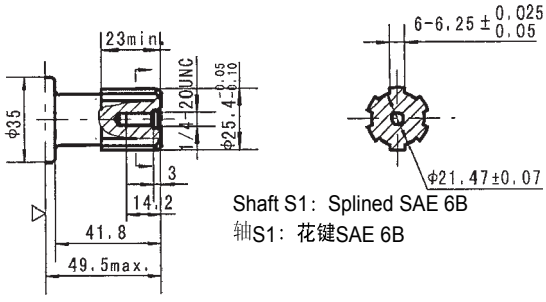

Shaft S1：Splined SAE 6B
轴S1：花键SAE 6B

Motor Mounting Surface (Dimension corresponding mounting E2, by analogy with others)
马达安装表面（尺寸与安装方式E2对应，通过与其他类比）

GS Series Technical Literature 轴伸参数

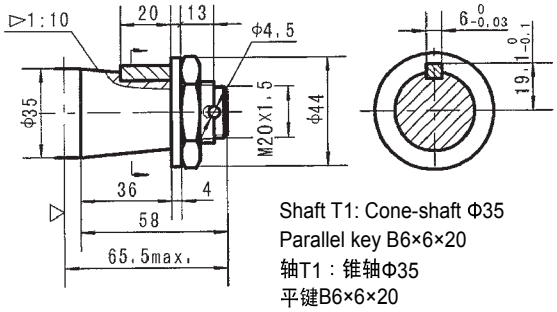

Shaft T1: Cone-shaft Φ35
Parallel key B6×6×20
轴T1：锥轴Φ35
平键B6×6×20

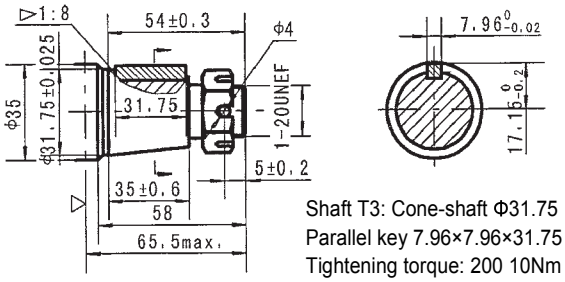

Shaft T3: Cone-shaft Φ31.75
Parallel key 7.96×7.96×31.75
Tightening torque: 200 10Nm
轴T3：锥轴Φ31.75
平键7.96×7.96×31.75
拧紧力矩：200 10Nm

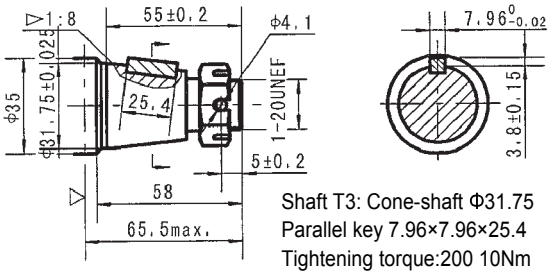

Shaft T3: Cone-shaft Φ31.75
Parallel key 7.96×7.96×25.4
Tightening torque:200 10Nm
轴T3：锥轴Φ31.75
平键7.96×7.96×25.4
拧紧力矩：200 10Nm

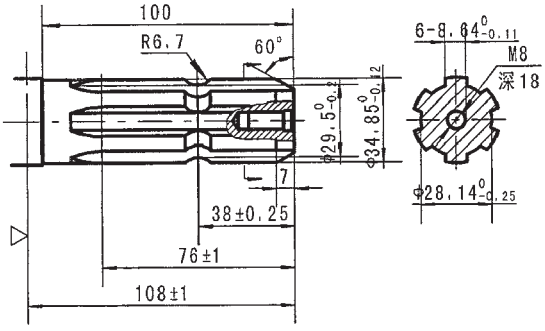

Shaft SL: Splined 6-34.85×28.14×8.64
轴SL：花键 6-34.85×28.14×8.64

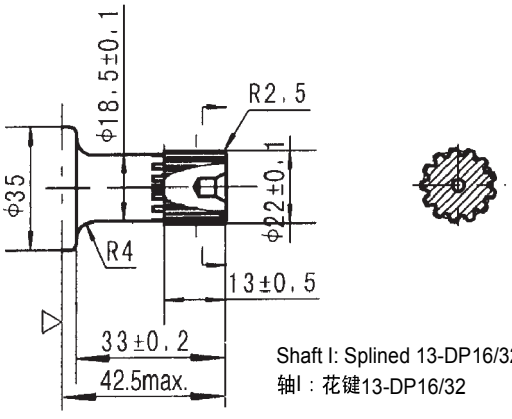

Shaft I: Splined 13-DP16/32
轴I：花键13-DP16/32

* Note: Mounting SP is the same with shaft modle T1、D、B、F and G.
备注：安装形式SP 与轴T1, D, B, F 和G一样。

GS Series Technical Literature 轴伸参数

Max. Permissible Shaft Seal Pressure 轴封最大可承受压力

Max. return pressure without drain line or max. pressure in the drain line 无卸载下最大回压或卸载下最大压力

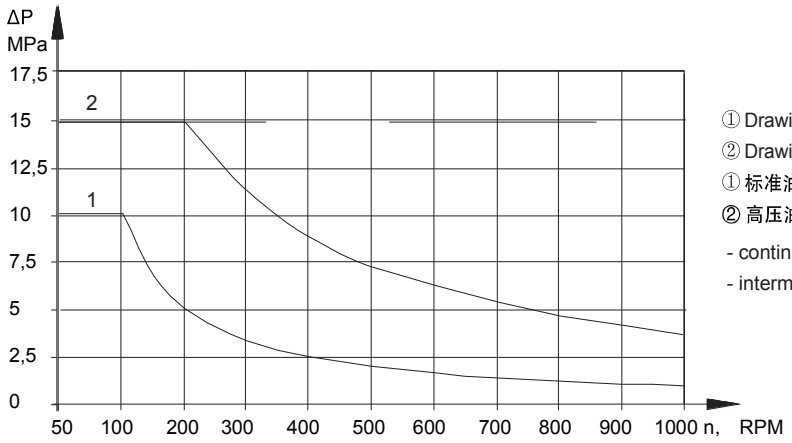

① Drawing for Standard Shaft Seal
② Drawing for High Pressure Seal ("U" Seal)
① 标准油封曲线图
② 高压油封（‘U’型油封）曲线图
- continuous operations 持续运行
- intermittent operations 间歇运行

Permissible Shaft Loads 可承受的轴负荷

The output shaft runs in tapered bearings that permit high axial and radial forces. The permissible radial load on the shaft is shown for an axial load of 0N as function of the distance from the mounting flange to the point of load application. The curves apply to a B10 bearing life of 2000 hours at 100 RPM .
Curve "1" shows max.radial shaft load. Any shaft load exceeding the values shown by the curve will seriously reduce motor life.
输出轴在锥形轴承中运行可以承受高轴向和径向负荷。图中可承受的轴负荷展示了0N轴负荷作为从安装法兰端到负荷运用全距离功能。此曲线在B10转速100 RPM经过2000小时 测试获得。
曲线“1”为最大轴径向负荷如果轴负荷超过图标值将严重马达使用寿命。

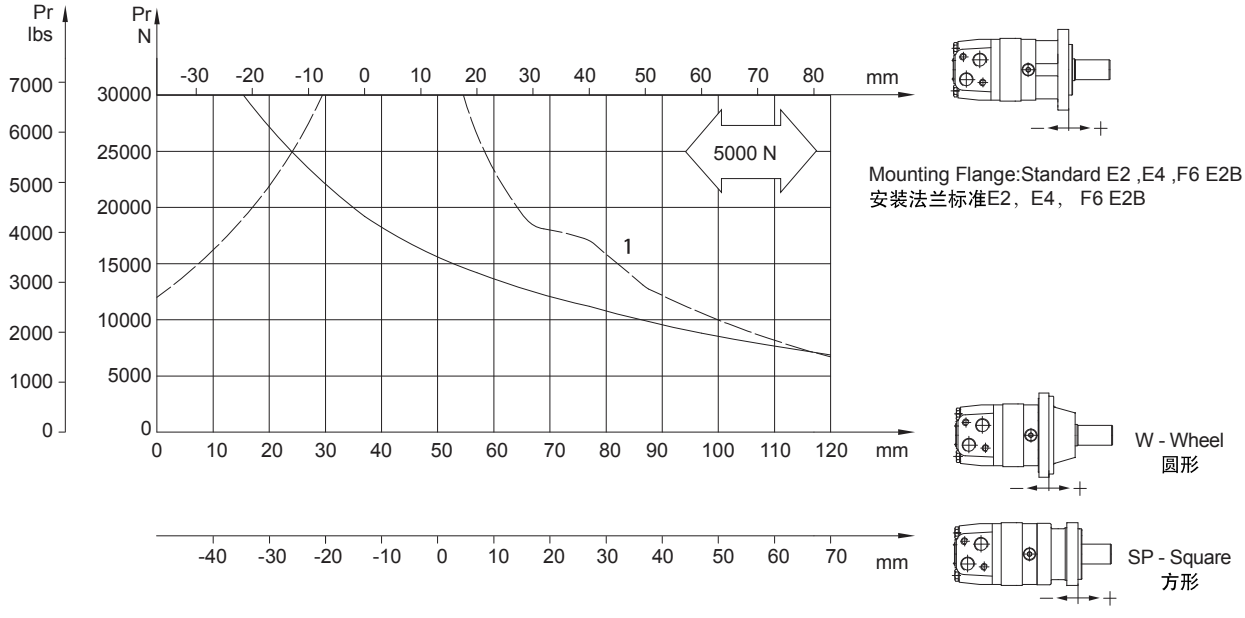

GS Series Technical Literature 轴伸参数

Function Diagra MSB 性能曲线 MSB

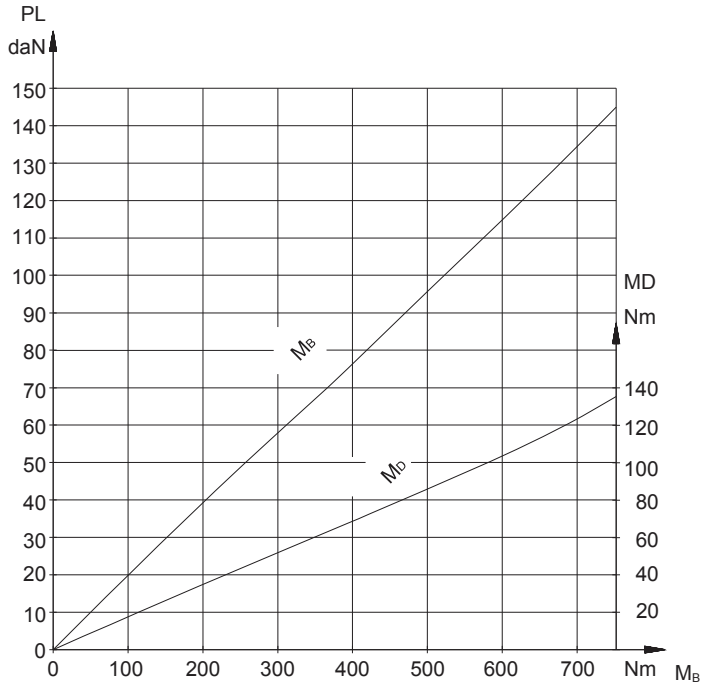

PL - Brake Lever Load 制动杆负载
MB - Brake Torque 制动扭矩
MD - Brake Lever Torque 制动杆扭矩

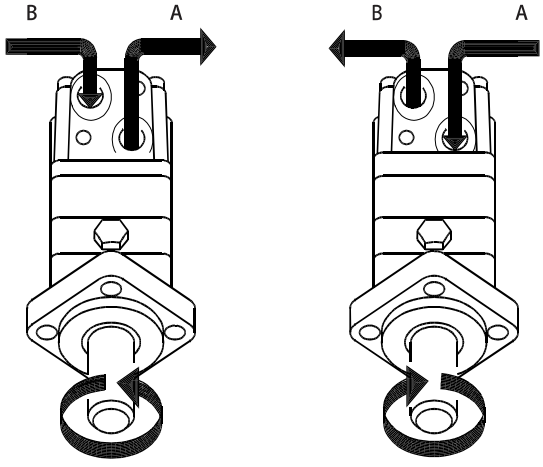

Order Information 选型信息

1	2	3	4	5	6	7	8
GS	–	–	–	–	–	–	–
GSS	–	–	–	–	–	–	–
GSJ	–	–	–	–	–	–	–

Pos.1	2	3		4		5		6		7		8	
Code 型号	Disp. 排量	Flange 法兰		Output Shaft 输出轴		Port and Drain Port 油口和泄油口		Rotation Direction 旋向		Paint 油漆 颜色		Unusually Function 特殊功能	
GS	80 100 125 160 200 250 315 375 400	E2 E4 F6 W E2B SP	2-Φ13.5 Rhomb-flange 106.4, Pilot Φ82.5×6.3 4-Φ13.5 Rhomb-flange 106.4, Pilot Φ82.5×6.3 6-Φ13.5 Rhomb-flange 106.4, Pilot Φ82.5×2.6 4-Φ13.5 Wheel-flange 160 , Pilot Φ125×8 2-Φ14.3 Rhomb-flange 146.05, Pilot Φ101.6×9.4 4-Φ11.5 Square-flange 106.4, Pilot Φ82.5×6.3	A B D G F FD SL T1 T3 S1 I	Shaft Φ25, Parllel Key 8×7×32 Shaft Φ32, Parllel Key 10×8×45 Shaft Φ25.4 , Parllel Key 6.35×6.35×25.4 Shaft Φ31.75 , Parllel Key 7.96×7.96×31.75 Shaft Φ31.75 , Splined Tooth 14-DP12/24 Long Shaft Φ31.75 , Splined Tooth 14-DP12/24 Shaft Φ34.85,Splined Key 6-34.85 28.14 8.64 Cone-shaft Φ35, Parllel Key B6×6×20 Cone-shaft Φ31.75 , Parllel Key 7.96×7.96×31.75 Shaft Φ25.4, Splined Tooth SAE 6B Sub-shaft Φ22, Splined Tooth 13-DP16/32	D M S P	G1/2 Manifold Mount 2-M10, G1/4 M22×1.5 Manifold Mount 2-M10, M14×15 7/8-14UNF O-ring Manifold 2-3/8-16, 7/16-20UNF 1/2-14NPTF Manifold 2-3/8-16UNC, 7/16-20UNF	Omit R	Standard 标准 Opposite 反向	00 Omit B S	No Paint 不涂漆 Blue 蓝色 Black 黑色 Silver Grey 银灰	Omit LL F LS	Standard 标准 Low Leakage 低泄漏 Free Running 自由运行 Low Speed 低速
GSS	475 525 565	D E	4-Φ11 Circle-flange 125 , Pilot Φ100×6 4- Φ13.5 Square-flange 127 , Pilot Φ101.6× 6.3	Omit	Short Shaft 12-DP12/24								
GSJ		J	4-Φ13.5 Square-flange 127 , Pilot Φ101.6×6.3	Omit	Short Shaft 12-DP12/24								

*Note:When the table is used, please fill the code of left rows in the table and give us, which the code information is consist of construction, displacement, mounting flange, output shaft and ports . If the specification is not in the table or you have specific requirements, please contact us. SP for T1、D、B、F、G.

备注：选型时，请完善左边的编码包括组成结构、排量、安装法兰、输出轴和油口。其他参数或任何疑问，请联系我们。SP适用于T1、D、B、F、G。

@201609印制

上海国瑞液压科技有限公司
SHANGHAI GUORUI HYDRAULIC TECHNOLOGY CO.,LTD
上海市虹口区四川北路1717号嘉杰国际广场2201-2202室
RM2201 JiaJie Building No1717 North Sichuan Road Shanghai China
电话/Tel:86-21-6218 3268 传真/Fax:86-21-6218 3018 邮编/P.C.:200080
Http://www.grhfluid.com Email: grh@grhcn.com

江苏国瑞液压机械有限公司
JIANGSU GUORUI HYDRAULIC MACHINERY CO.,LTD
江苏省建湖县高新区双湖西路666号
No. 666 West Shuanghu Road Hi-tech Zone Jianhu Jiangsu China
电话/Tel:86-515-8631 6688 传真/Fax:86-515-8631 7168 邮编/P.C.:224700
Http://www.grhpower.com Email: sales@grhcn.com